TOWNSHIP OF OSNABRUCK

JIM BANCROFT
REEVE

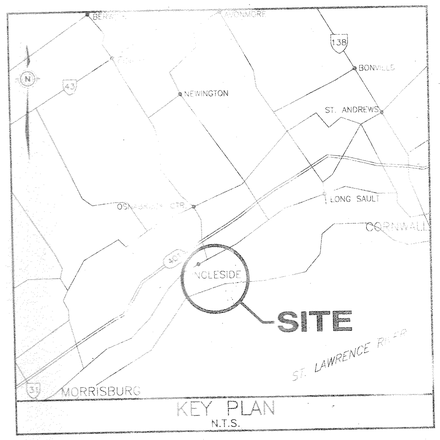

KEY PLAN
N.T.S.

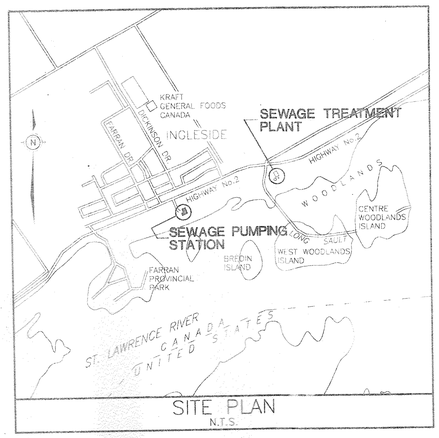

SITE PLAN
N.T.S.

McNEELY ENGINEERING CONSULTANTS LTD.
CONSULTING ENGINEERS

INGLESIDE
SEWAGE TREATMENT PLANT

AS BUILT - MARCH, 1998

O.C.W.A. PROJECT NO. 40-0797

CONTRACT NO. 4

Ontario

AS-BUILT EXCEPT AS NOTED ON DRAWINGS

TENDER ISSUE (OCT./95) DRAWINGS ONLY

☐ ALL OTHER DRAWINGS HAVE BEEN REVISED TO INCORPORATE CHANGES AS INDICATED IN THE CONTRACTOR'S MARKED UP DRAWINGS. CHANGES DONE BY OWNER/OCWA WITHOUT THE CONSULTANT'S INVOLVEMENT ARE NOT INCLUDED ON THE DRAWINGS. CONTRACTOR'S DRAWINGS ARE NOT VERIFIED ON SITE BY ENGINEER. THE ENGINEER DOES NOT TAKE RESPONSIBILITY FOR INFORMATION ON DRAWINGS THAT ARE IN CONFLICT WITH THE EXISTING CONDITION DUE TO INACCURATE OR MISSING INFORMATION ON SOURCE DOCUMENTS PROVIDED.

No.	Date	Revision
4	MARCH/98	AS BUILT
3	OCT/95	ISSUED FOR TENDER
2	SEPT. 15/95	ISSUED FOR REVIEW
1	JAN. 16/95	ISSUED FOR M.O.E.E. APPROVAL

McNEELY ENGINEERING CONSULTANTS LTD.

Owner: TOWNSHIP OF OSNABRUCK

Project: INGLESIDE SEWAGE TREATMENT PLANT
O.C.W.A. SEWAGE WORKS PROJECT No. 40-0797

Title: DRAWING INDEX

Design	H.A.I.	Scale	N/A	Proj. No. M2544-4	Dwg No.
Drawn	T.H.	Check	H.A.I.	Date SEPT. 15/95	

DWG.	TITLE
	FRONT DRAWINGS
	COVER SHEET
	DRAWING INDEX
	SITE WORK
G1	EXISTING PLANT – SITE LAYOUT
G2	EXISTING PLANT BUILDING – PLANS
G3	EXISTING PLANT BUILDING – SECTION
G4	LAYOUT PLAN
G5	YARD PIPING
G6	SITE GRADING, LANDSCAPING, DRAINAGE
G7	SITE DETAILS
G8	ROAD PROFILES
G9	YARD PIPING PROFILES I
G10	YARD PIPING PROFILES II
G11	SITE SECTIONS
	PROCESS
P1	PLANT HYDRAULIC PROFILE
P2	PROCESS DIAGRAM – LEGEND
P3	PROCESS DIAGRAM – SUMMARY
P4	PROCESS DIAGRAM – I
P5	PROCESS DIAGRAM – II
P6	PROCESS DIAGRAM – III
P7	PROCESS DIAGRAM – IV
P8	PROCESS DIAGRAM – V
P9	PROCESS DIAGRAM – VI
P10	PROCESS DIAGRAM – VII
PU1	HEADWORKS – PLAN
PU2	HEADWORKS – SECTION
PU3	HEADWORKS – SECTIONS & DETAILS
PU4	AERATION TANKS & DIGESTERS – PLAN & SECTIONS
PU5	INLET BOX / PRE-AERATION CHANNELS – PLAN
PU6	AERATION TANKS – PLAN
PU7	AERATION TANKS – SECTIONS & DETAILS
PU8	AEROBIC DIGESTERS – PLAN
PU9	AEROBIC DIGESTERS – SECTIONS & DETAILS
PU10	SECONDARY CLARIFIER – PLAN
PU11	SECONDARY CLARIFIER – SECTIONS & DETAILS
PU12	FLOCCULATION BASIN & SCUM CHAMBER – PLAN & SECTIONS

DWG.	TITLE
PU13	EFFLUENT WATER BASIN & AERATION TANK FOAM CONTROL PIPING – PLANS, SECT'S & DET'S
PU14	PARSHALL FLUME – PLAN & SECTIONS
PU15	BLOWER & RAS/WAS PUMP ROOMS – PLAN
PU16	BLOWER & RAS/WAS PUMP ROOMS – SECTIONS
PU17	CHEMICAL ROOMS – PLAN
PU18	CHEMICAL ROOMS – SECTIONS
PU19	SLUDGE TANK – PLAN & SECTION / SLUDGE LOADING PLATFORM – PLAN & SECTION
PU20	SLUDGE CENTRIFUGE BUILDING – PLAN, ELEVATION, SECTION, & DETAILS
PU21	SUBMERSIBLE PUMPING STATION – PLAN, SECTION & DETAILS
PU22	MISCELLANEOUS I
PU23	MISCELLANEOUS II
PU24	PROCESS PIPING SUPPORT DETAILS
PU25	PIPES, VALVES & GATES – SCHEDULE I
PU26	PIPES, VALVES & GATES – SCHEDULE II
PU27	PIPES, VALVES & GATES – SCHEDULE III
PU28	PIPES, VALVES & GATES – SCHEDULE IV
PU29	PIPES, VALVES & GATES – SCHEDULE V
	STRUCTURAL
S01	GENERAL NOTES AND LEGEND – STRUCTURAL
S02	HEADWORKS – FOOTING, SLAB-ON GRADE & SECTIONS
S03	HEADWORKS – 2ND FLOOR PLAN & SECTIONS
S04	AERATION & SECONDARY CLARIFIER TANK GROUP – FOUNDATION LAYOUT & TYPICAL DETAILS
S05	AERATION & SECONDARY CLARIFIER TANK GROUP – WALL LAYOUT & TYPICAL DETAILS
S06	AERATION & SECONDARY CLARIFIER TANK GROUP – SECTIONS
S07	AERATION & DIGESTER TANKS – WALL AND SLAB FRAMING & REINFORCING
S08	AERATION & DIGESTER TANKS – SECTIONS & DETAILS
S09	SECONDARY CLARIFIER & FLOCCULATION BASIN GROUP – PLANS & SECTIONS
S10	BLOWER, PUMP & CHEMICAL ROOMS – PLANS & SECTIONS
S11	BLOWER, PUMP & CHEMICAL ROOMS – ELEVATIONS, SECTIONS & DETAILS
S12	ALUM BUILDING – PLANS & SECTIONS
S13	PARSHALL FLUME – PLAN, SECTIONS & DETAILS
S14	SLUDGE STORAGE TANK – PLAN, SECTIONS & DETAILS
S15	CENTRIFUGE BUILDING – PLANS, SECTIONS & DETAILS
S16	CENTRIFUGE BUILDING – ELEVATIONS
S17	SLUDGE LOADING PLATFORM – FLOOR PLAN & SECTION
S18	CONTROL BUILDING – FOOTINGS, SLAB-ON-GRADE & FOUNDATION ELEVATIONS
S19	CONTROL BUILDING – MASONRY WALL PLAN, SECTIONS & DETAILS
S20	CONTROL BUILDING – ROOF FRAMING PLAN & TRUSS SUMMARY
S21	TYPICAL DETAILS FOR ALUMINUM FABRICATIONS – DETAILS & SECTIONS

DWG.	TITLE
	MECHANICAL
M1	MECHANICAL (H.V.A.C.) LEGEND
M2	CONTROL BUILDING – HVAC EQUIPMENT LAYOUT
M3	CONTROL BUILDING – DUCT LAYOUT
M4	CONTROL BUILDING – GAS & DIESEL FUEL SUPPLY
M5	CONTROL BUILDING – PLUMBING
M6	BLOWER / POLYMER / PUMP ROOMS DUCTING – H & V PLAN AND SECTIONS
M7	BLOWER ROOM – SECTIONS
M8	CHEMICAL ROOMS / CENTRIFUGE BUILDING – H & V PLANS
M9	EQUIPMENT / ALUM BUILDINGS – ROOF LAYOUT
M10	HEATING & VENTILATING SYSTEM – CONTROL SCHEMATICS I
M11	HEATING & VENTILATING SYSTEM – CONTROL SCHEMATICS II
M12	CONTROL BUILDING – DETAILS
	ELECTRICAL
E1	SITE PREPARATION WORK AND LEGEND
E2	ELECTRICAL SITE SERVICING PLAN
E3	HEADWORKS
E4	AERATION TANKS, DIGESTERS, AND CLARIFIERS
E5	BLOWER AND RAS/WAS PUMP ROOMS
E6	CHEMICAL ROOMS
E7	CENTRIFUGE BUILDING
E8	SUBMERSIBLE PUMPING STATION AND PARSHALL FLUME
E9	CONTROL BUILDING AND DETAILS
E10	POWER DISTRIBUTION DIAGRAM
E11	SCHEDULES AND DETAILS
E12	CONTROL SYSTEM BLOCK DIAGRAM AND INSTRUMENTATION INDEX
E13	PROCESS & INSTRUMENTATION DIAGRAM I
E14	PROCESS & INSTRUMENTATION DIAGRAM II
E15	CONTROL SCHEMATICS I
E16	CONTROL SCHEMATICS II
E17	DETAILS
	ARCHITECTURAL
A1	CONTROL BUILDING – FLOOR PLAN
A2	CONTROL BUILDING – ELEVATIONS
A3	CONTROL BUILDING – ELEVATIONS
A4	CONTROL BUILDING – BUILDING SECTIONS & MILLWORK ELEVATIONS
A5	CONTROL BUILDING – WALL SECTIONS
A6	CONTROL BUILDING – WALL SECTIONS
A7	CONTROL BUILDING – SECTION DETAILS

AS BUILT

NOTE: REVISED "AS-BUILT" DRAWING. THIS DRAWING HAS BEEN REVISED TO INCORPORATE CHANGES AS INDICATED IN THE CONTRACTOR'S MARKED UP DRAWINGS. CHANGES DONE BY OWNER/OCWA WITHOUT THE CONSULTANT'S INVOLVEMENT ARE NOT INCLUDED ON THE DRAWINGS. CONTRACTOR'S DRAWINGS ARE NOT VERIFIED ON SITE BY ENGINEER. THE ENGINEER DOES NOT TAKE RESPONSIBILITY FOR INFORMATION ON THIS DRAWING THAT IS IN CONFLICT WITH THE EXISTING CONDITION DUE TO INACCURATE OR MISSING INFORMATION ON SOURCE DOCUMENTS PROVIDED.

NOTES:

1. THE LOCATION OF UTILITIES IS APPROXIMATE ONLY, AND THE EXACT LOCATION SHOULD BE DETERMINED BY CONSULTING THE MUNICIPAL AUTHORITIES AND UTILITY COMPANIES CONCERNED. THE CONTRACTOR SHALL PROVE THE LOCATION OF UTILITIES AND SHALL BE RESPONSIBLE FOR ADEQUATE PROTECTION FROM DAMAGE DURING CONSTRUCTION.
2. ALL DIMENSIONS TO BE FIELD VERIFIED BY THE CONTRACTOR.
3. THE CONTRACTOR SHALL MAINTAIN A CLEAR AREA FOR THE NEW ABOVE GROUND BY-PASS LINE.

SCALE 0 2 4m

No.	Date	Revision
5	MARCH/98	AS BUILT
4	NOV/95	REVISED AS PER ADDENDUM No.3
3	OCT/95	ISSUED FOR TENDER
2	SEPT.15/95	ISSUED FOR REVIEW
1	JAN. 16/95	ISSUED FOR M.O.E.E. APPROVAL

McNEELY ENGINEERING CONSULTANTS LTD.

Owner	TOWNSHIP OF OSNABRUCK
Project	INGLESIDE SEWAGE TREATMENT PLANT O.C.W.A. SEWAGE WORKS PROJECT No. 40-0797
Title	EXISTING PLANT SITE LAYOUT

Design	H.A.I.	Scale	AS SHOWN	Proj. No.	M2544-4	Dwg No.	G-1
Drawn	G.R.L.	Check	D.W.L.	Date	SEPT.15/95		

DEMOLISH & FILL IN ACCORDANCE WITH SECTION 02225 OF SPECIFICATION (THERE IS NO SLAB DEMOLTION FOR THE DRYING BEDS)

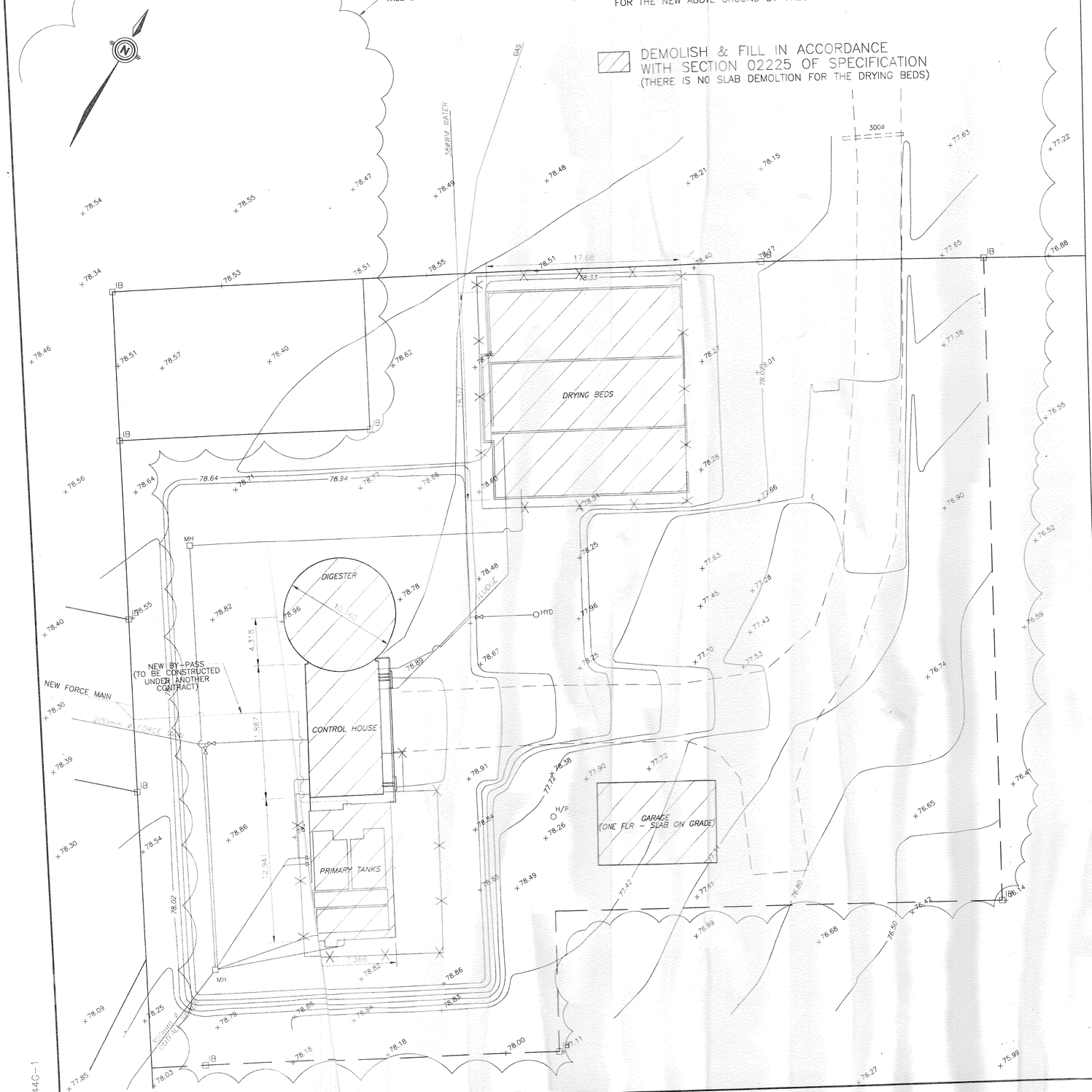

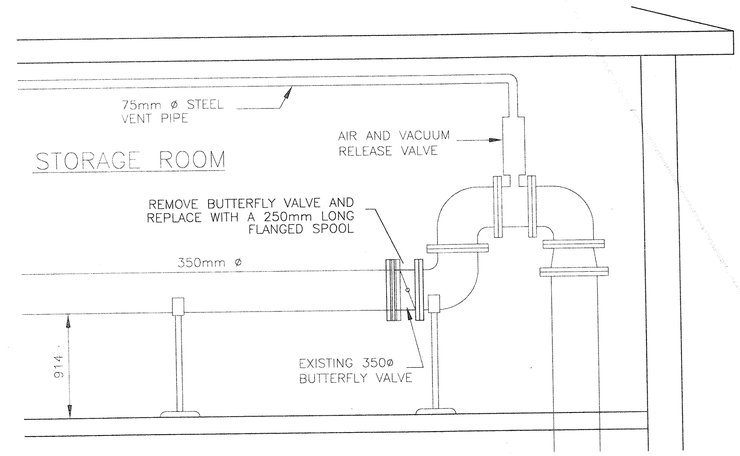

VALVE REMOVAL

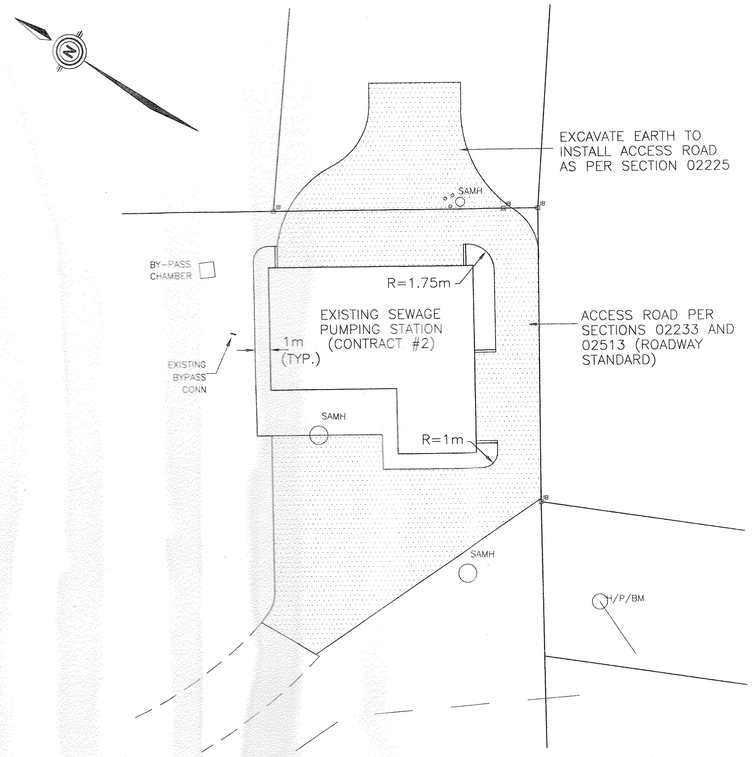

PAVEMENT

MODIFICATIONS TO SEWAGE PUMPING STATION

M2544-1

NOTE:

1. THE LOCATION OF UTILITIES IS APPROXIMATE ONLY, AND THE EXACT LOCATION SHOULD BE DETERMINED BY CONSULTING THE MUNICIPAL AUTHORITIES AND UTILITY COMPANIES CONCERNED. THE CONTRACTOR SHALL PROVE THE LOCATION OF UTILITIES AND SHALL BE RESPONSIBLE FOR ADEQUATE PROTECTION FROM DAMAGE DURING CONSTRUCTION.
2. ALL DIMENSIONS ARE APPROXIMATE.
3. ALL EQUIPMENT, PIPING, METAL WORK, ETC., SHALL BE DISMANTLED.
4. EQUIPMENT SHOWN HERE FOR INFORMATION ONLY, CONTRACTOR SHALL VISIT THE SITE AND VERIFY THE EQUIPMENT, PIPING AND ALL OTHER ACCESSORIES.

AS BUILT

NOTE: REVISED "AS-BUILT" DRAWING. THIS DRAWING HAS BEEN REVISED TO INCORPORATE CHANGES AS INDICATED IN THE CONTRACTOR'S MARKED UP DRAWINGS. CHANGES DONE BY OWNER/OCWA WITHOUT THE CONSULTANT'S INVOLVEMENT ARE NOT INCLUDED ON THE DRAWINGS. CONTRACTOR'S DRAWINGS ARE NOT VERIFIED ON SITE BY ENGINEER. THE ENGINEER DOES NOT TAKE RESPONSIBILITY FOR INFORMATION ON THIS DRAWING THAT IS IN CONFLICT WITH THE EXISTING CONDITION DUE TO INACCURATE OR MISSING INFORMATION ON SOURCE DOCUMENTS PROVIDED.

SCALE 0 0.5 1m

No.	Date	Revision
5	MARCH/98	AS BUILT
4	NOV/95	REVISED AS PER ADDENDUM No.3
3	OCT/95	ISSUED FOR TENDER
2	SEPT.15/95	ISSUED FOR REVIEW
1	JAN. 16/95	ISSUED FOR M.O.E.E. APPROVAL

McNEELY ENGINEERING CONSULTANTS LTD.

Owner: TOWNSHIP OF OSNABRUCK

Project: INGLESIDE SEWAGE TREATMENT PLANT
O.C.W.A SEWAGE WORKS PROJECT No. 40-0797

Title: EXISTING PLANT BUILDING
PLANS

Design	H.A.I.	Scale	AS SHOWN	Proj. No.	M2544-4	Dwg No.
Drawn	G.R.L.	Check	D.W.L.	Date	SEPT.15/95	G-2

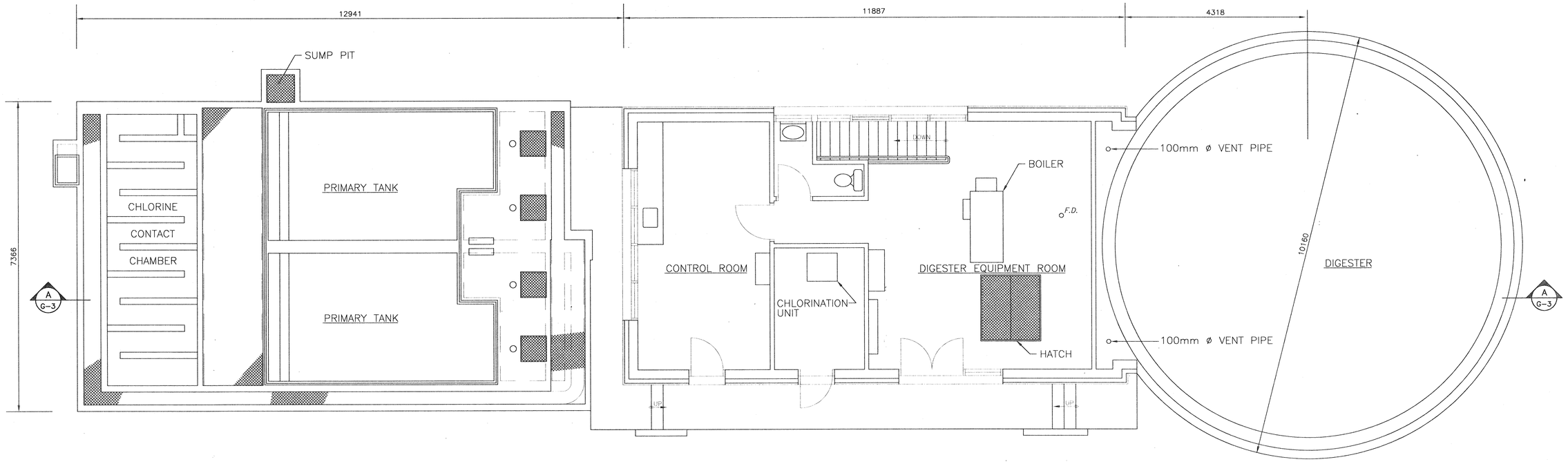

EXISTING MAIN FLOOR PLAN (TO BE DEMOLISHED)

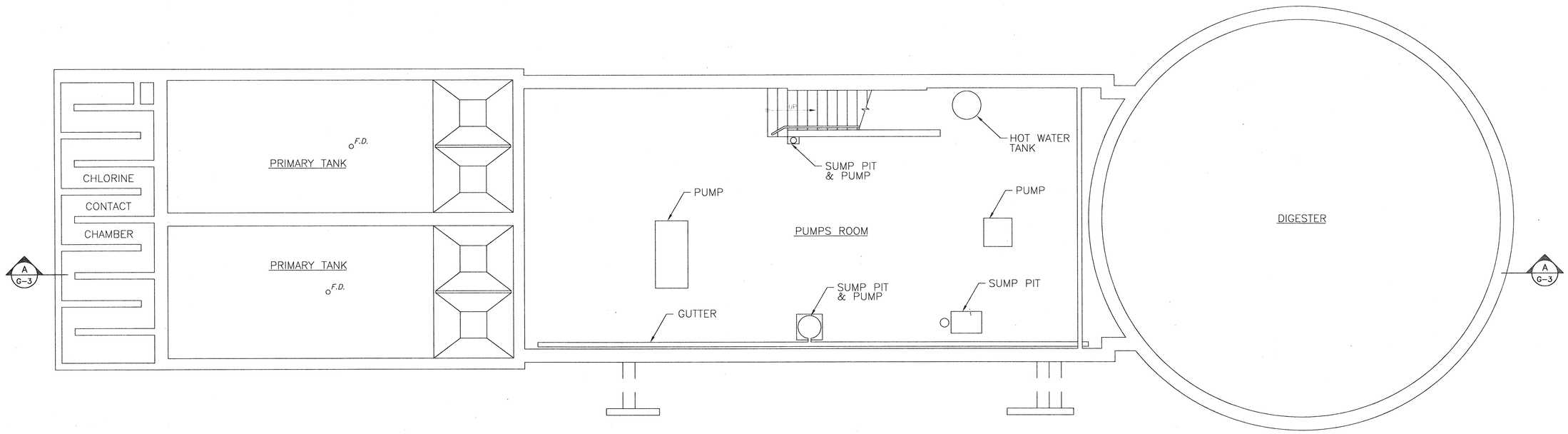

EXISTING BASEMENT PLAN (EQUIPMENT TO BE REMOVED AND SUBSTRUCTURE TO BE FILLED IN ACCORDANCE WITH SECTION 02225 OF THE SPECIFICATIONS.

2544G-2

NOTE:

1. THE LOCATION OF UTILITIES IS APPROXIMATE ONLY, AND THE EXACT LOCATION SHOULD BE DETERMINED BY CONSULTING THE MUNICIPAL AUTHORITIES AND UTILITY COMPANIES CONCERNED. THE CONTRACTOR SHALL PROVE THE LOCATION OF UTILITIES AND SHALL BE RESPONSIBLE FOR ADEQUATE PROTECTION FROM DAMAGE DURING CONSTRUCTION.
2. ALL DIMENSIONS ARE APPROXIMATE.
3. ALL EQUIPMENT, PIPING, ETC., SHALL BE DISMANTLED.
4. EQUIPMENT SHOWN HERE FOR INDICATION ONLY, CONTRACTOR SHALL VISIT THE SITE AND VERIFY THE EQUIPMENT, PIPING AND ALL OTHER ACCESSORIES.

AS BUILT

NOTE: REVISED "AS-BUILT" DRAWING. THIS DRAWING HAS BEEN REVISED TO INCORPORATE CHANGES AS INDICATED IN THE CONTRACTOR'S MARKED UP DRAWINGS. CHANGES DONE BY OWNER/OCWA WITHOUT THE CONSULTANT'S INVOLVEMENT ARE NOT INCLUDED ON THE DRAWINGS. CONTRACTOR'S DRAWINGS ARE NOT VERIFIED ON SITE BY ENGINEER. THE ENGINEER DOES NOT TAKE RESPONSIBILITY FOR INFORMATION ON THIS DRAWING THAT IS IN CONFLICT WITH THE EXISTING CONDITION DUE TO INACCURATE OR MISSING INFORMATION ON SOURCE DOCUMENTS PROVIDED.

SCALE

0 0.5 1m

No.	Date	Revision
4	MARCH/98	AS BUILT
3	OCT/95	ISSUED FOR TENDER
2	SEPT.15/95	ISSUED FOR REVIEW
1	JAN. 13/94	ISSUED FOR M.O.E.E. APPROVAL

McNEELY
ENGINEERING
CONSULTANTS LTD.

Owner	TOWNSHIP OF OSNABRUCK
Project	INGLESIDE SEWAGE TREATMENT PLANT O.C.W.A. SEWAGE WORKS PROJECT No. 40-0797
Title	EXISTING PLANT BUILDING SECTION

Design	H.A.I.	Scale	AS SHOWN	Proj. No. M2544-4	Dwg No. G-3
Drawn	G.R.L.	Check	D.W.L.	Date SEPT.15/95	

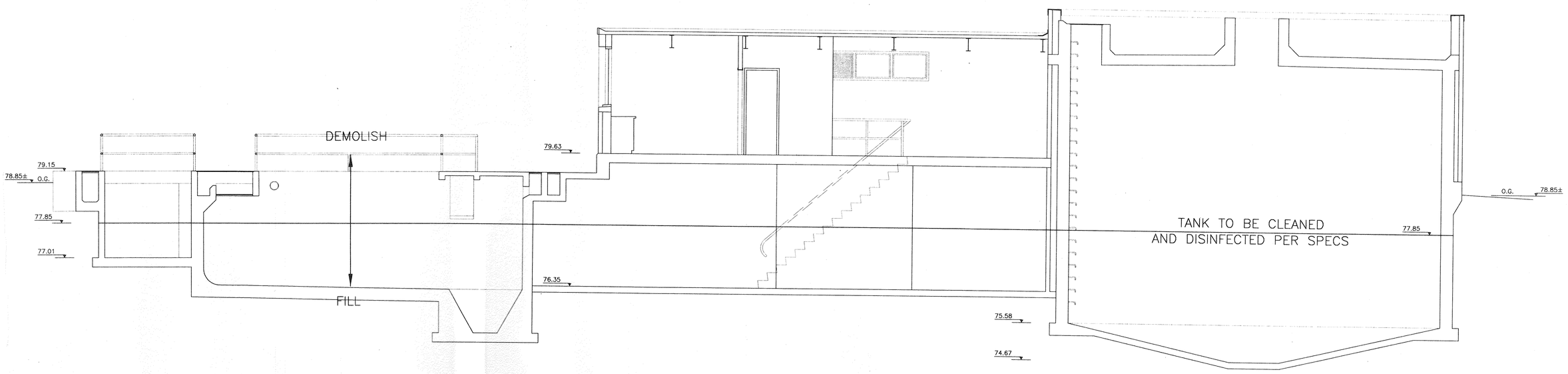

SECTION A / G-3

2544G-3

NOTE:
THE LOCATION OF UTILITIES IS APPROXIMATE ONLY, AND THE EXACT LOCATION SHOULD BE DETERMINED BY CONSULTING THE MUNICIPAL AUTHORITIES AND UTILITY COMPANIES CONCERNED. THE CONTRACTOR SHALL PROVE THE LOCATION OF UTILITIES AND SHALL BE RESPONSIBLE FOR ADEQUATE PROTECTION FROM DAMAGE DURING CONSTRUCTION.

AS BUILT

NOTE: REVISED "AS-BUILT" DRAWING. THIS DRAWING HAS BEEN REVISED TO INCORPORATE CHANGES AS INDICATED IN THE CONTRACTOR'S MARKED UP DRAWINGS. CHANGES DONE BY OWNER/OCWA WITHOUT THE CONSULTANT'S INVOLVEMENT ARE NOT INCLUDED ON THE DRAWINGS. CONTRACTOR'S DRAWINGS ARE NOT VERIFIED ON SITE BY ENGINEER. THE ENGINEER DOES NOT TAKE RESPONSIBILITY FOR INFORMATION ON THIS DRAWING THAT IS IN CONFLICT WITH THE EXISTING CONDITION DUE TO INACCURATE OR MISSING INFORMATION ON SOURCE DOCUMENTS PROVIDED.

0 3 6m

CO-ORDINATE SYSTEM SHOWN IS BASED ON THE UNIVERSAL TRAVERSE MERCATOR GRID

GEODETIC BENCHMARK No.2891
ELEV. 79.131m
91.4m SOUTH OF LONG SAULT PARKWAY ENTRANCE. TABLET IN S.W. OR BACK CONCRETE FOUNDATION WALL. 0.55m FROM S. CORNER AND 0.37m BELOW BRICKWORK.

No.	Date	Revision
6	MARCH/98	AS BUILT
5	JUNE/96	CONTROL BUILDING REVISED
4	NOV/95	REVISED AS PER ADDENDUM No.3
3	OCT/95	ISSUED FOR TENDER
2	SEPT.15/95	ISSUED FOR REVIEW
1	JAN. 16/94	ISSUED FOR M.O.E.E. APPROVAL

McNEELY ENGINEERING CONSULTANTS LTD.

Owner	TOWNSHIP OF OSNABRUCK
Project	INGLESIDE SEWAGE TREATMENT PLANT O.C.W.A SEWAGE WORKS PROJECT No. 40-0797
Title	LAYOUT PLAN

Design	J.V.G.	Scale	AS SHOWN	Proj. No.	M2544-4	Dwg No.	G-4
Drawn	E.C.	Check	D.W.L.	Date	SEPT.15/95		

FOR ROAD ALIGNMENT DETAILS SEE DWG. No.G-7

B G11

188694.798 E 4985055.946 N
188732.495 E 4984986.754 N
BH 4.9
188796.440 E 4984883.708 N
A G11
EAST ROAD
188737.118 E 4984956.686 N
188717.071 E 4984990.657 N
188719.577 E 4984979.131 N
188723.197 E 4984970.585 N
188719.753 E 4984968.552 N
CHEMICAL LOADING BAY
188698.114 E 4985005.073 N
PRIMARY AEROBIC DIGESTER
SECONDARY AEROBIC DIGESTER
BH 4.5
CHEMICAL BUILDING
EQUIPMENT BUILDING
SECONDARY CLARIFIER #2
FLOCCULATION BASIN
SCUM CHAMBER
EFFLUENT WATER BASIN
188740.914 E 4984920.310 N
188757.978 E 4984916.233 N
188756.079 E 4984910.980 N
CENTRIFUGE BUILDING
SOUTH ROAD
188752.978 E 4984914.500 N
188727.076 E 4984914.711 N
DIGESTED SLUDGE STORAGE TANK
188740.758 E 4984891.489 N
SLUDGE LOADING PLATFORM
SLUDGE LOADING BAY
188726.805 E 4984904.546 N
188668.391 E 4985025.233 N
BH 4.2
188666.938 E 4985005.029 N
AERATION TANK 2
BH 4.8
A G11
IB
HEADWORKS
188657.999 E 4985000.531 N
188660.892 E 4985001.461 N
GRIT CLASSIFIER
AERATION TANK 1
SECONDARY CLARIFIER #1
EQUIPMENT BUILDING
300ø
BH 4.1
188650.402 E 4984995.619 N
HEADWORKS ROAD
188658.325 E 4984981.593 N
BH 4.4
188710.417 E 4984900.277 N
188703.447 E 4984905.696 N
188694.753 E 4984903.869 N
PARSHALL FLUME
188690.017 E 4984908.038 N
BH 4.7
188654.265 E 4984989.096 N
EXISTING GARAGE TO BE DEMOLISHED
CB
188671.447 E 4984947.158 N
EQUIPMENT ROAD
188666.855 E 4984951.143 N
188645.380 E 4984987.535 N
188659.824 E 4984950.952 N
188699.332 E 4984889.428 N
188692.169 E 4984902.344 N
188688.225 E 4984906.981 N
188699.974 E 4984889.916 N
VALVE CHAMBER
SUBMERSIBLE PUMPING STATION
188668.282 E 4984936.620 N
188664.628 E 4984937.415 N
EXISTING DRYING BEDS TO BE DEMOLISHED
188626.741 E 4984990.661 N
WEST ROAD
BH 4.10
188657.385 E 4984930.189 N
CB
CONTROL BUILDING
BH 4.6
BH 4.3
EXISTING BUILDING TO BE DEMOLISHED
B.M.No.2891
188640.529 E 4984920.806 N
188649.677 E 4984905.304 N
MH
188581.755 E 4984989.180 N
188683.496 E 4984817.057 N
MH (BY OTHERS)
LIMIT OF CONTRACT
NEW FORCEMAIN, VALVES & CHAMBER BY OTHERS
B G11
EXISTING OUTFALL
NEW OUTFALL (BY OTHERS)
BH 2.1

2544G-4

NOTE:

1) THE LOCATION OF UTILITIES IS APPROXIMATE ONLY, AND THE EXACT LOCATION SHOULD BE DETERMINED BY CONSULTING THE MUNICIPAL AUTHORITIES AND UTILITY COMPANIES CONCERNED. THE CONTRACTOR SHALL PROVE THE LOCATION OF UTILITIES AND SHALL BE RESPONSIBLE FOR ADEQUATE PROTECTION FROM DAMAGE DURING CONSTRUCTION.

2) THRUST RESTRAINTS TO BE LOCATED AS INDICATED AND AT ALL OTHER 22.5° AND GREATER BENDS. SEE DRAWING PU-22 FOR TYPICAL DETAILS.

3) SEE DWG. PU-25, PU-26, PU-28 AND PU-29 FOR PIPE AND VALVE SCHEDULE

AS BUILT

NOTE: REVISED "AS-BUILT" DRAWING. THIS DRAWING HAS BEEN REVISED TO INCORPORATE CHANGES AS INDICATED IN THE CONTRACTOR'S MARKED UP DRAWINGS. CHANGES DONE BY OWNER/OCWA WITHOUT THE CONSULTANT'S INVOLVEMENT ARE NOT INCLUDED ON THE DRAWINGS. CONTRACTOR'S DRAWINGS ARE NOT VERIFIED ON SITE BY ENGINEER. THE ENGINEER DOES NOT TAKE RESPONSIBILITY FOR INFORMATION ON THIS DRAWING THAT IS IN CONFLICT WITH THE EXISTING CONDITION DUE TO INACCURATE OR MISSING INFORMATION ON SOURCE DOCUMENTS PROVIDED.

LEGEND (SEE DWG. P-2 FOR FURTHER INFO)

- YARD PIPING
- PROCESS INTERCONNECTING PIPING
- MUNICIPAL WATER
- FORCEMAIN
- MH — MANHOLE
- HW — HEAD WALL
- TB — THRUST BLOCK
- CB — CATCH BASIN

0 3 6m

No.	Date	Revision
6	MARCH/98	AS BUILT
5	JUNE/96	CONTROL BUILDING REVISED
4	NOV/95	REVISED AS PER ADDENDUM No.3
3	OCT/95	ISSUED FOR TENDER
2	SEPT.15/95	ISSUED FOR REVIEW
1	JAN 16/95	ISSUED FOR M.O.E.E. APPROVAL

McNEELY ENGINEERING CONSULTANTS LTD.

Owner: TOWNSHIP OF OSNABRUCK

Project: INGLESIDE SEWAGE TREATMENT PLANT
O.C.W.A. SEWAGE WORKS PROJECT No. 40-0797

Title: YARD PIPING

Design	J.V.G.	Scale	AS SHOWN	Proj. No.	M2544-4	Dwg No.
Drawn	E.C.	Check	D.W.L.	Date	SEPT.15/95	G-5

GAS MAIN TO BE INSTALLED BY OTHERS
LOCATION SHOWN IS FOR INFORMATION ONLY

EAST ROAD
WEST ROAD
SOUTH ROAD
HEADWORKS ROAD
EQUIPMENT ROAD

HW 1
HW 2
HW 3
HW 4
MH 1
MH 2
MH 3
MH 4
MH 5
MH 6
MH 7
MH 8
CB 1
CB 2
CB 3
CB 4
CB 5
CB 7
CB 8
CB 9
CB 10
DICB 6
HB-005
HB-007
HB-008
HB-010
TB
IB

BH 2.11
BH 4.1
BH 4.2
BH 4.3
BH 4.4
BH 4.5
BH 4.6
BH 4.7
BH 4.8
BH 4.9
BH 4.10

300-ST-914-PVC
50-D-741-PVC
200-D-717-PVC
200-D-711-PVC
50-D-729-PVC
100-D-712-DI
100-D-714-DI
150-D-726-DI
150-D-724-DI
PROCESS PIPING SEE DWG.PU-8
100-DS-306-DI
CHEMICAL LOADING BAY
100-D-736-PVC
150-D-739-PVC
100-D-737-PVC
SECONDARY AEROBIC DIGESTER
PRIMARY AEROBIC DIGESTER
CHEMICAL BUILDING
25-POLY-605-PVC (PIPE RUNS 150mm DIRECTLY ABOVE PIPE 100-DS-306-DI TO CENTRIFUGE BLDG.)
GAS
CENTRIFUGE BUILDING
200-ST-920-PVC
PIPING DETAILS, SEE DWGS. PU-19 & PU-20
200-ST-919-PVC
150-TS-311-DI
38-EW-804-PVC
DIGESTED SLUDGE STORAGE TANK
150-D-716-DI
38-EW-802-PVC
150-D-720-DI
150-D-721-PVC
200-D-718-PVC
38-EW-802-PVC
SLUDGE LOADING PLATFORM
SLUDGE LOADING BAY
EFFLUENT WATER BASIN
SCUM CHAMBER
400-EW-832-PE
C1
C2
200-D-727-PVC
200-D-728-PVC
PARSHALL FLUME
38-EW-808-PVC
400-RSW-002-DI-I+ET
HEADWORKS
GRIT CLASSIFIER
375-ST-913-PVC
375-ST-912-PVC
AERATION TANK 2
AERATION TANK 1
EQUIPMENT BUILDING
SECONDARY CLARIFIER #2
SECONDARY CLARIFIER #1
FLOCCULATION BASIN
75-EW-801-PVC
150-EW-819-PVC
75-EW-806-PVC
100-D-735-PVC
150-D-704-PVC
300-ST-911-CSP
100-D-710-PVC
150-D-705-PVC
75-EW-806-PVC
100-RSW-024-DI
200-ST-916-PVC
200-D-722-PVC
150-D-729-PVC
200-D-733-PVC
375-ST-918-PVC
38-EW-813-PVC
250-ST-917-PVC
125-D-730-PVC
38-EW-812-PVC
38-EW-846-PVC
VALVE CHAMBER
SUBMERSIBLE PUMPING STATION
200-ST-915-PVC
19-MW-831-PE
SUBMERSIBLE PUMPING STATION FOR FOUNDATION DRAINS
200-D-734-PVC
100-D-738-PVC
CONTROL BUILDING
150-MW-829-PVC
25-MW-830-PE
800-EW-833-PE
200-ST-910-PVC
400-RSW-001-DI
100-D-704-PVC
EXISTING DRYING BEDS TO BE DEMOLISHED
EXISTING GARAGE TO BE DEMOLISHED
EXISTING BUILDING TO BE DEMOLISHED
TRUCK ACCESS TO BE:
200mm GRANULAR 'B'
50mm GRANULAR 'A'
50mm ASPHALT HL.3
LIMIT OF CONTRACT
NEW FORCEMAIN, VALVES & CHAMBER BY OTHERS
EXISTING OUTFALL
MH (BY OTHERS)
NEW OUTFALL (BY OTHERS)

A G11
B G11

2544G-5

NOTE:
THE LOCATION OF UTILITIES IS APPROXIMATE ONLY, AND THE EXACT LOCATION SHOULD BE DETERMINED BY CONSULTING THE MUNICIPAL AUTHORITIES AND UTILITY COMPANIES CONCERNED. THE CONTRACTOR SHALL PROVE THE LOCATION OF UTILITIES AND SHALL BE RESPONSIBLE FOR ADEQUATE PROTECTION FROM DAMAGE DURING CONSTRUCTION.

AS BUILT

NOTE: REVISED "AS-BUILT" DRAWING. THIS DRAWING HAS BEEN REVISED TO INCORPORATE CHANGES AS INDICATED IN THE CONTRACTOR'S MARKED UP DRAWINGS. CHANGES DONE BY OWNER/OCWA WITHOUT THE CONSULTANT'S INVOLVEMENT ARE NOT INCLUDED ON THE DRAWINGS. CONTRACTOR'S DRAWINGS ARE NOT VERIFIED ON SITE BY ENGINEER. THE ENGINEER DOES NOT TAKE RESPONSIBILITY FOR INFORMATION ON THIS DRAWING THAT IS IN CONFLICT WITH THE EXISTING CONDITION DUE TO INACCURATE OR MISSING INFORMATION ON SOURCE DOCUMENTS PROVIDED.

LEGEND

77.09 / 77.05 EXISTING GRADE (TYP.) / PROPOSED GRADE (TYP.)

BH 4.6 BOREHOLE (TYP.)

ASPHALT PAVING

0 3 6m

No.	Date	Revision
6	MARCH/98	AS BUILT
5	JUNE/96	CONTROL BUILDING REVISED
4	NOV/95	REVISED AS PER ADDENDUM No.3
3	OCT/95	ISSUED FOR TENDER
2	SEPT.15/95	ISSUED FOR REVIEW
1	JAN. 16/95	ISSUED FOR M.O.E.E. APPROVAL

McNEELY ENGINEERING CONSULTANTS LTD.

Owner: TOWNSHIP OF OSNABRUCK

Project: INGLESIDE SEWAGE TREATMENT PLANT
O.C.W.A. SEWAGE WORKS PROJECT No. 40-0797

Title: SITE GRADING, LANDSCAPING, DRAINAGE

Design	J.V.G.	Scale	AS SHOWN	Proj. No.	M2544-4	Dwg No.
Drawn	E.C.	Check	D.W.L.	Date	SEPT.15/95	G-6

NEW CHAIN LINK FENCE PLUS 3 STRANDS OF BARBED WIRE PER OPSD-900.01 AND OPSD 900.02

EAST ROAD

WEST ROAD

SOUTH ROAD

HEADWORKS ROAD

EQUIPMENT ROAD

ASPHALT WALKWAY PERIMETER PATH

ASPHALT WALKWAY (TYP.)

PLANTED 7-2m HIGH MIN. CONIFEROUS TREES AND 8-70mm DIA. MIN. DECIDUOUS TREES AS INDICATED.

7.0m WIDE OPENING SLIDING CHAIN LINK GATE PER OSPD-900.03

EXISTING DRYING BEDS TO BE MAINTAINED DURING PLANT CONSTRUCTION. THIS PORTION OF ROAD AND GRADES TO BE COMPLETED AFTER DRYING BEDS ARE DECOMMISIONED AND DEMOLISHED.

EXISTING DRYING BEDS TO BE DEMOLISHED

EXISTING BUILDING TO BE DEMOLISHED

EXISTING GARAGE TO BE DEMOLISHED

PRIMARY AEROBIC DIGESTER

SECONDARY AEROBIC DIGESTER

AERATION TANK 1

AERATION TANK 2

CHEMICAL BUILDING

CHEMICAL LOADING BAY

EQUIPMENT BUILDING

SECONDARY CLARIFIER #1

SECONDARY CLARIFIER #2

FLOCCULATION BASIN

EFFLUENT WATER BASIN

SCUM CHAMBER

GRIT CLASSIFIER

HEADWORKS

SLUDGE LOADING PLATFORM

SLUDGE LOADING BAY

CENTRIFUGE BUILDING

DIGESTED SLUDGE STORAGE TANK

CONTROL BUILDING

SUBMERSIBLE PUMPING STATION

SUBMERSIBLE PUMPING STATION FOR FOUNDATION DRAINS

VALVE CHAMBER

PARSHALL FLUME

FOR GRADE AROUND FLUME SEE DWG. No.G-9

CONCRETE CURB

TRUCK ACCESS TO BE:
200mm GRANULAR 'B'
50mm GRANULAR 'A'
50mm ASPHALT HL.3

PLANTED 3-2m HIGH MIN. CONIFEROUS TREES AND 2-70mm DIA. MIN. DECIDUOUS TREES AS INDICATED.

NOTE:
PROVIDE AND SPREAD 100mm TOPSOIL, SEED, AND MULCH TO ALL DISTURBED AREAS (TYP.)

EXISTING OUTFALL

NEW OUTFALL (BY OTHERS)

MH 1 MH 2 MH 3 MH 4 MH 5 MH 6 MH 7 MH 8

CB 1 CB 2 CB 3 CB 4 CB 5 CB 6 CB 7 CB 8 CB 9 CB10 CB11

HW 1 HW 2 HW 3 HW 4

BH 2.11 BH 4.1 BH 4.2 BH 4.3 BH 4.4 BH 4.5 BH 4.6 BH 4.7 BH 4.8 BH 4.9 BH 4.10

200-ST-915-PVC
200-ST-916-PVC
200-ST-917-PVC
200-ST-918-PVC
250-ST-917-PVC
300-ST-914-PVC
375-ST-912-PVC
375-ST-913-PVC
375-ST-916-PVC
375-ST-917-PVC
375-ST-918-PVC

2544G-6

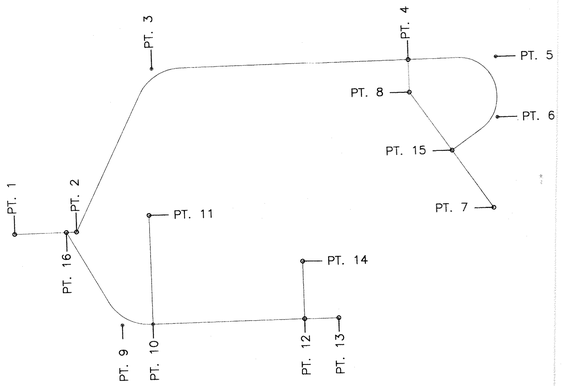

POINT NO.	CO-ORDINATES		RADIUS	TANGENT	LENGTH	
	NORTHING	EASTING				
PT 1	4985033.449	188636.864				
PT 2	4985016.350	188646.955				
PT 3	4985020.082	188704.453	15.000	9.238	16.560	24 21"
PT 4	4984949.120	188746.228				
PT 5	4984924.852	188760.416				
PT 6	4984915.147	188743.626	12.000	6.364	11.703	23 36"
PT 7	4984902.375	188717.610				
PT 8	4984943.805	188737.221				14 36"
PT 9	4984989.174	188627.563	15.000	8.830	15.961	11 58"
PT 10	4984980.657	188632.490				
PT 11	4984998.455	188662.666				
PT 12	4984638.759	188657.215				
PT 13	4984929.302	188662.796				
PT 14	4984948.149	188673.126				
PT 15	4984922.924	188727.337				
PT 16	4985019.185	188645.282				

AS BUILT

NOTE: REVISED "AS-BUILT" DRAWING. THIS DRAWING HAS BEEN REVISED TO INCORPORATE CHANGES AS INDICATED IN THE CONTRACTOR'S MARKED UP DRAWINGS. CHANGES DONE BY OWNER/OCWA WITHOUT THE CONSULTANT'S INVOLVEMENT ARE NOT INCLUDED ON THE DRAWINGS. CONTRACTOR'S DRAWINGS ARE NOT VERIFIED ON SITE BY ENGINEER. THE ENGINEER DOES NOT TAKE RESPONSIBILITY FOR INFORMATION ON THIS DRAWING THAT IS IN CONFLICT WITH THE EXISTING CONDITION DUE TO INACCURATE OR MISSING INFORMATION ON SOURCE DOCUMENTS PROVIDED.

No.	Date	Revision
4	MARCH/97	AS BUILT
3	OCT/95	ISSUED FOR TENDER
2	SEPT.15/95	ISSUED FOR REVIEW
1	JAN. 13/95	ISSUED FOR M.O.E.E. APPROVAL

McNEELY ENGINEERING CONSULTANTS LTD.

Owner: TOWNSHIP OF OSNABRUCK

Project: INGLESIDE SEWAGE TREATMENT PLANT
O.C.W.A. SEWAGE WORKS PROJECT No. 40-0797

Title: SITE DETAILS

Design	J.V.G	Scale	AS SHOWN	Proj. No. M2544-4	Dwg No. G-7
Drawn	E.C	Check	D.W.L.	Date SEPT.15/95	

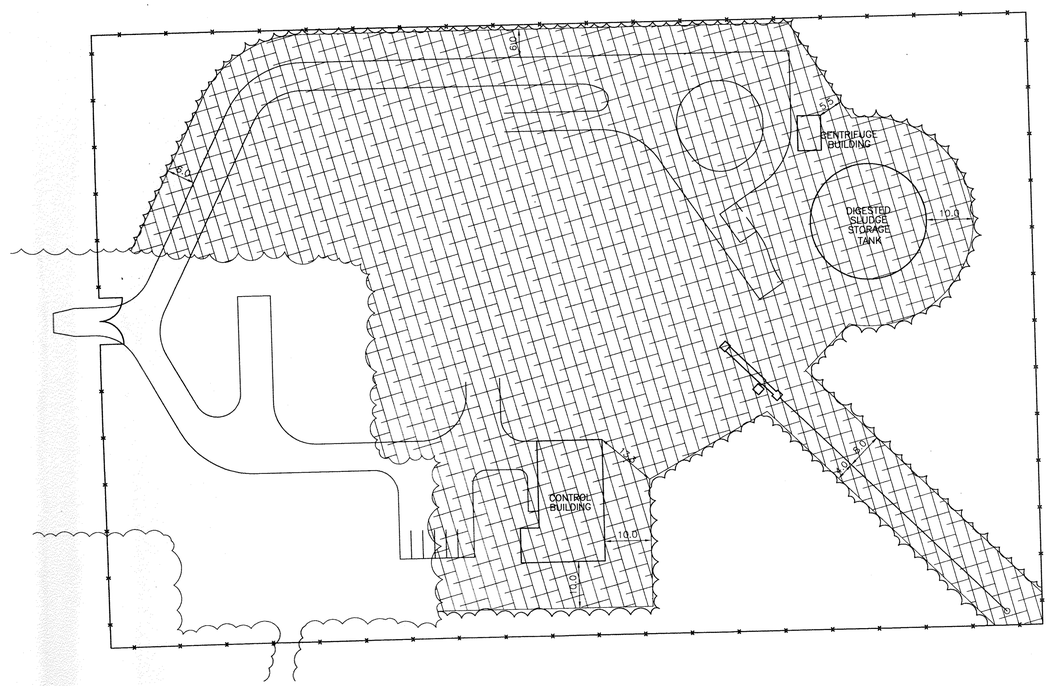

CLEARING AND GRUBBING PLAN

N.T.S.

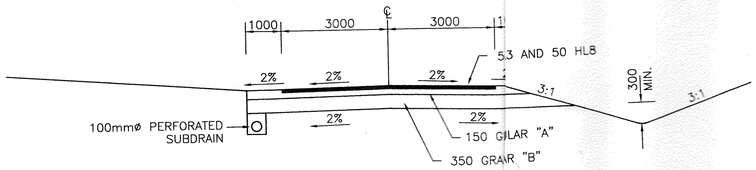

NOTE:
CONTRACTOR TO REVIEW THE SOILS REPORT FOR OTHERTAILS REGARDING ROAD CONSTRUCTION.
SUBDRAIN IS TO DRAIN TO AND CONNECT INTO THE NEXT CATCHBASIN.

TYPICAL ROAD SECTN

N.T.S.

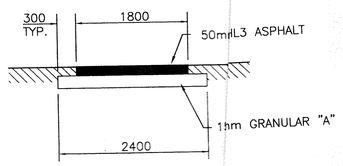

ASPHALT WALKWAY

N.T.S.

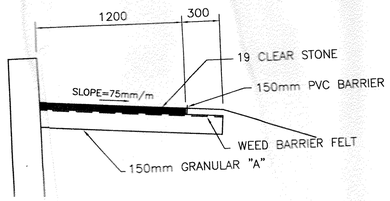

GRANULAR 'A' - CLEAR STONE WALKWAY AROUND PLANT

N.T.S.

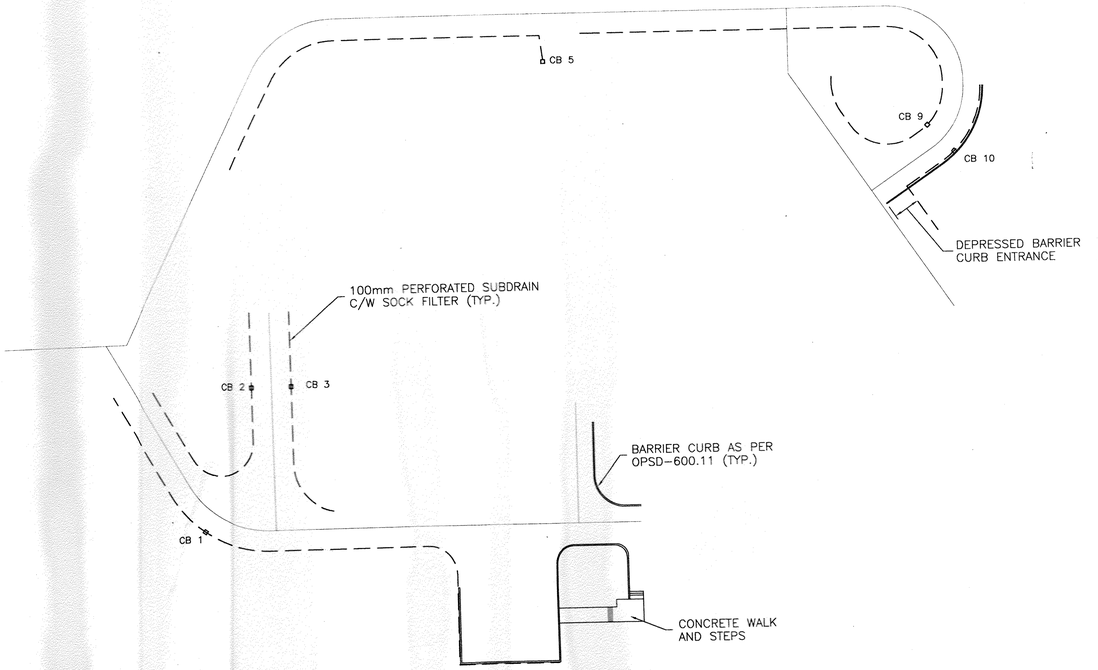

CURB PLAN AND ROAD SUBDRAIN PLAN

N.T.S.

2544G-7

AS BUILT

NOTE: REVISED "AS-BUILT" DRAWING. THIS DRAWING HAS BEEN REVISED TO INCORPORATE CHANGES AS INDICATED IN THE CONTRACTOR'S MARKED UP DRAWINGS. CHANGES DONE BY OWNER/OCWA WITHOUT THE CONSULTANT'S INVOLVEMENT ARE NOT INCLUDED ON THE DRAWINGS. CONTRACTOR'S DRAWINGS ARE NOT VERIFIED ON SITE BY ENGINEER. THE ENGINEER DOES NOT TAKE RESPONSIBILITY FOR INFORMATION ON THIS DRAWING THAT IS IN CONFLICT WITH THE EXISTING CONDITION DUE TO INACCURATE OR MISSING INFORMATION ON SOURCE DOCUMENTS PROVIDED.

0 5 10m HORIZ.

0 0.5 1.0m VERT.

No.	Date	Revision
4	MARCH/98	AS BUILT
3	OCT/95	ISSUED FOR TENDER
2	SEPT.15/95	ISSUED FOR REVIEW
1	JAN. 16/95	ISSUED FOR M.O.E.E. APPROVAL

McNEELY ENGINEERING CONSULTANTS LTD.

Owner: TOWNSHIP OF OSNABRUCK

Project: INGLESIDE SEWAGE TREATMENT PLANT
O.C.W.A. SEWAGE WORKS PROJECT No. 40-0797

Title: ROAD PROFILES

Design	J.V.G.	Scale	AS SHOWN	Proj. No.	M2544-4	Dwg No.
Drawn	E.C.	Check	D.W.L.	Date	SEPT.15/95	G-8

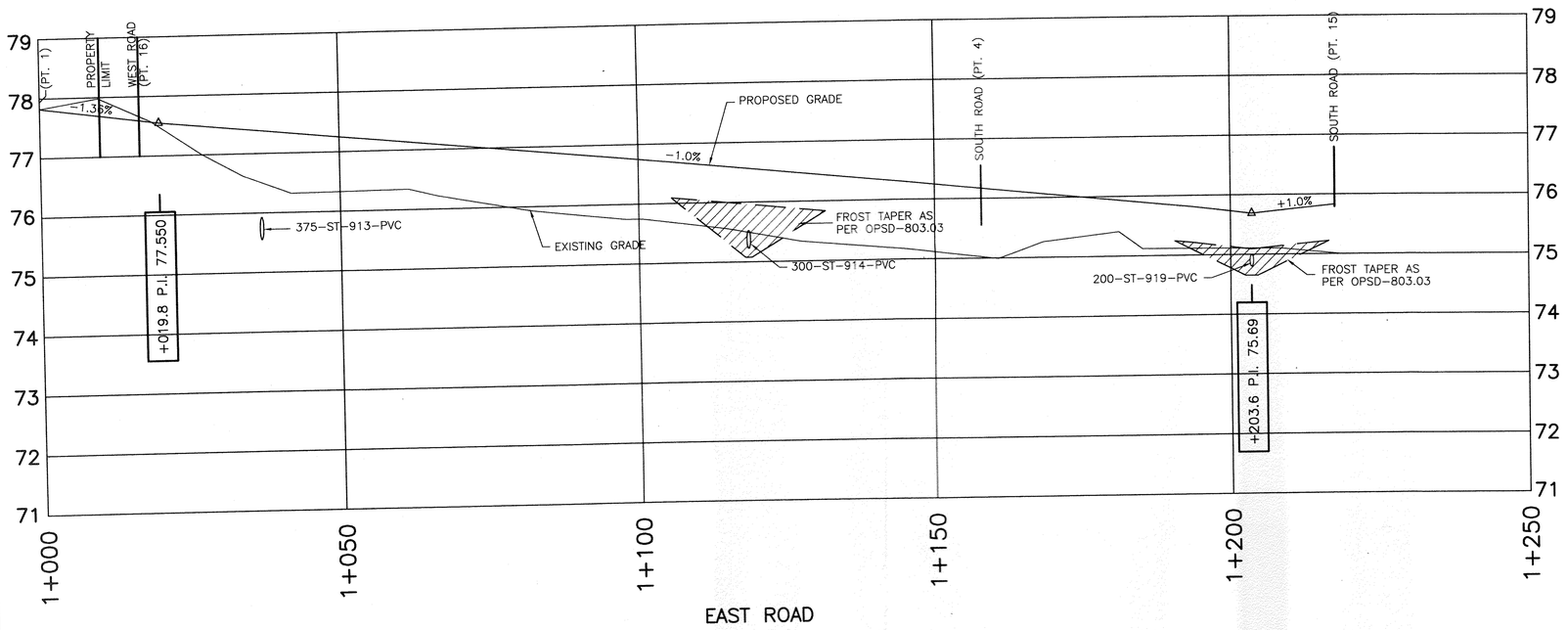

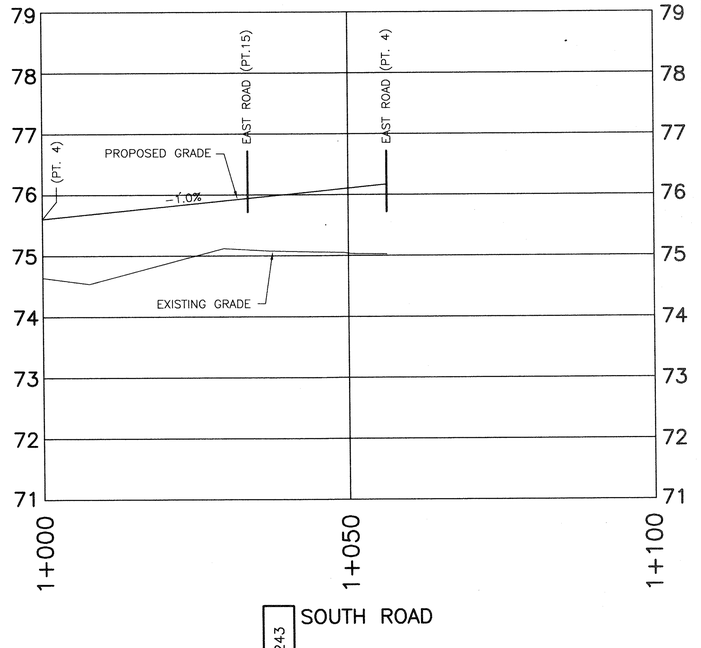

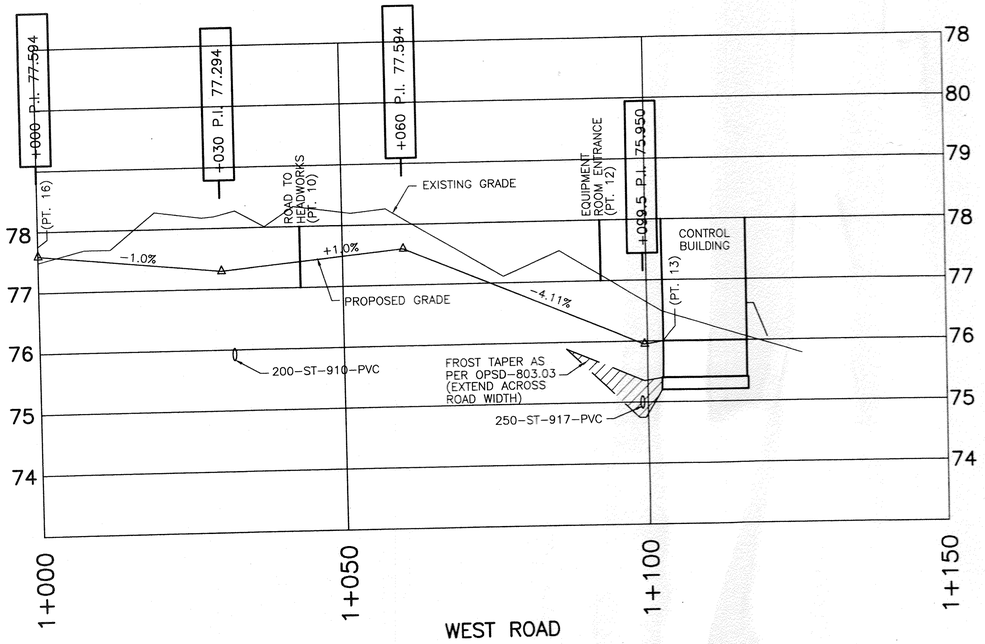

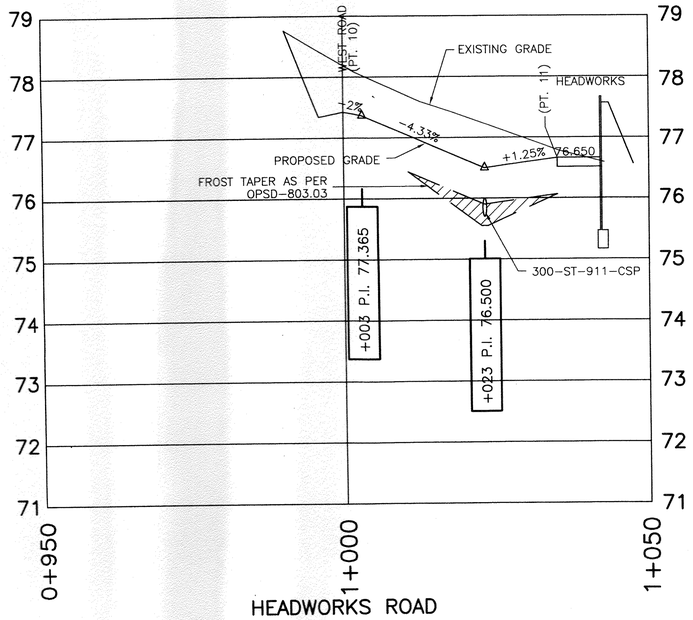

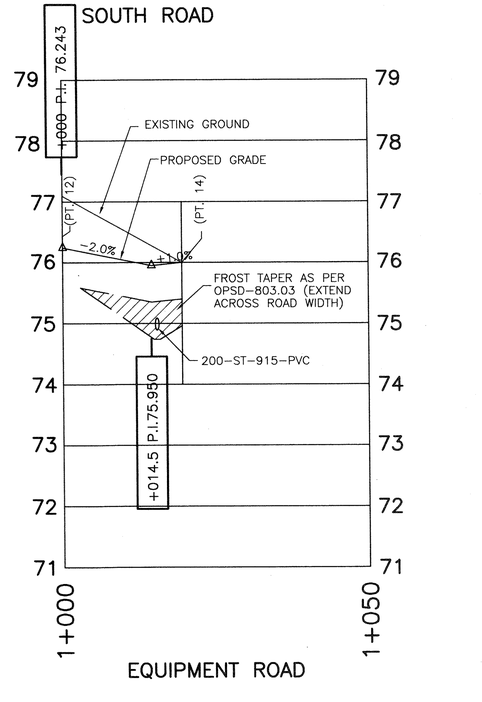

2544G-8

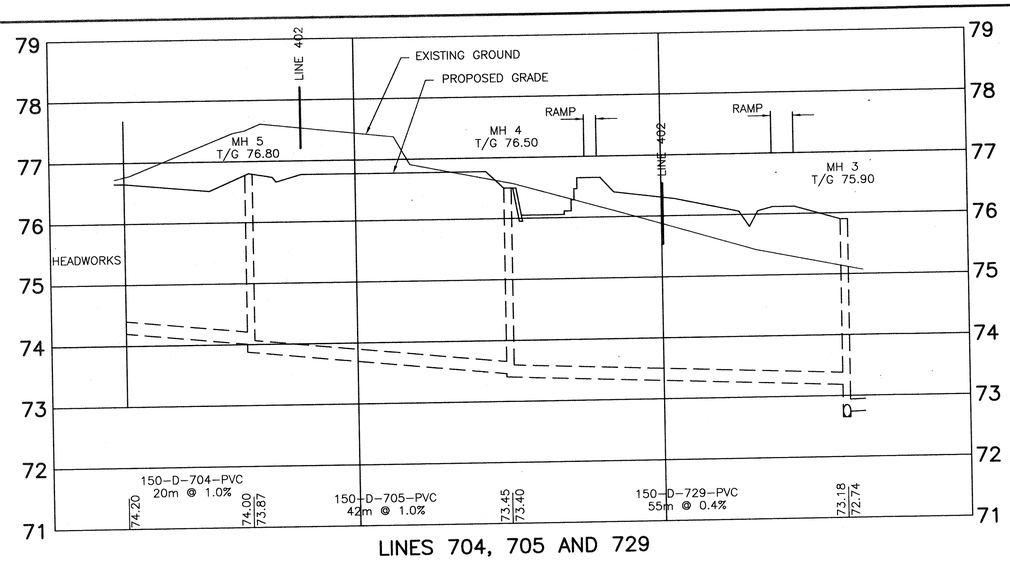

LINES 704, 705 AND 729

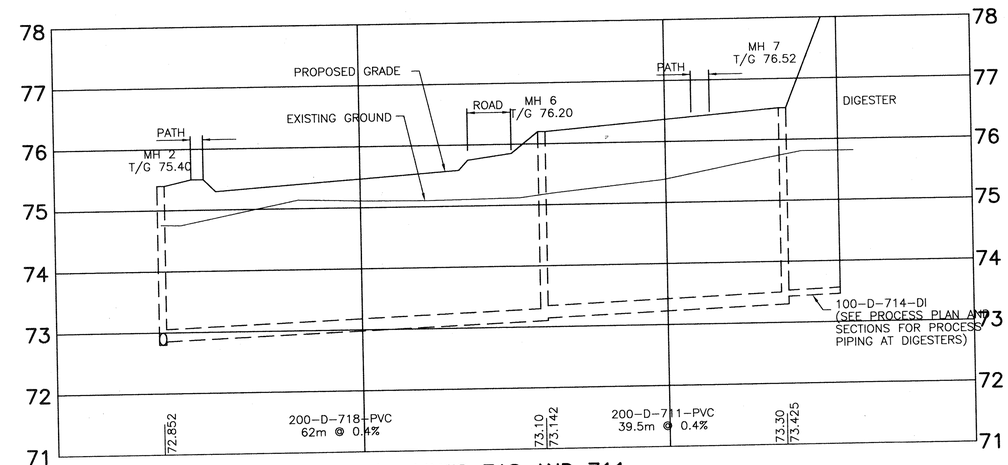

LINES 718 AND 711

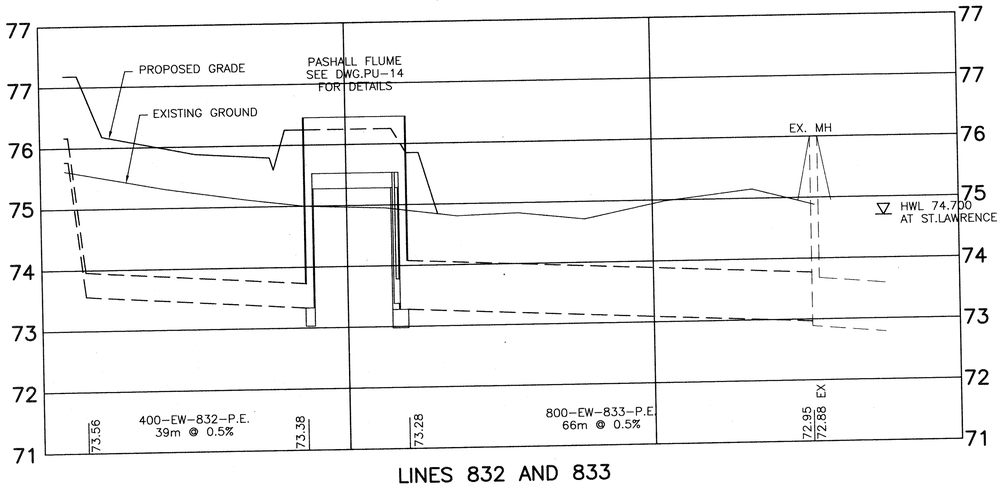

LINES 832 AND 833

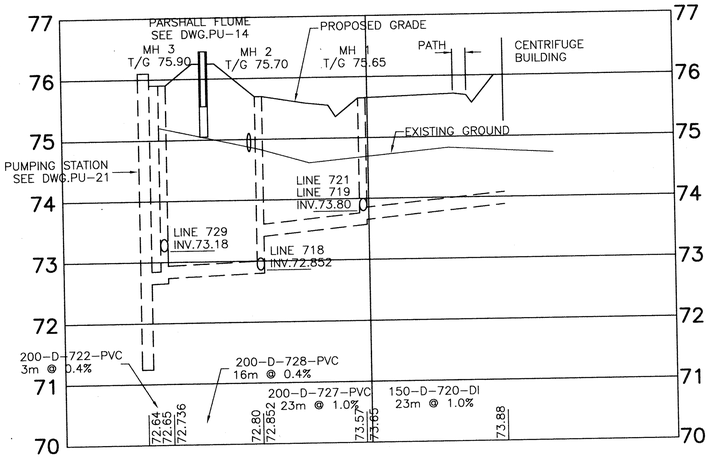

LINES 720, 722, 727 AND 728

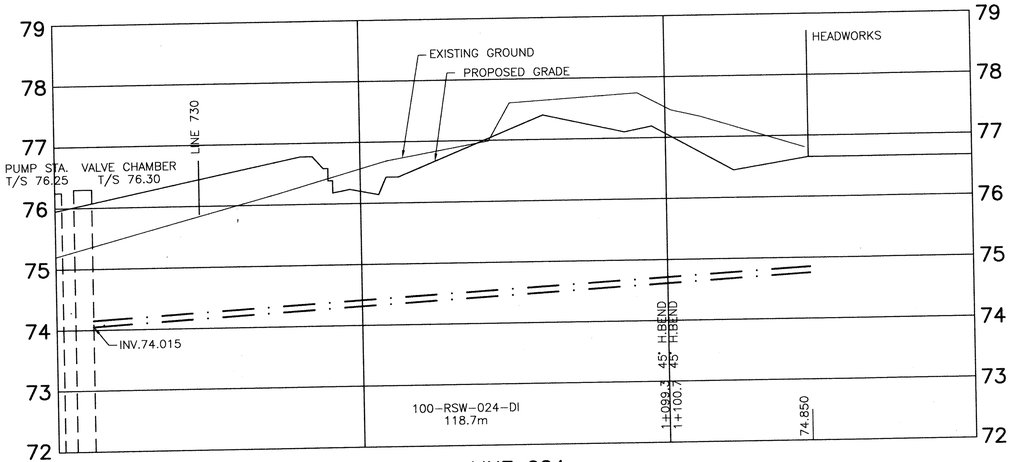

LINE 024

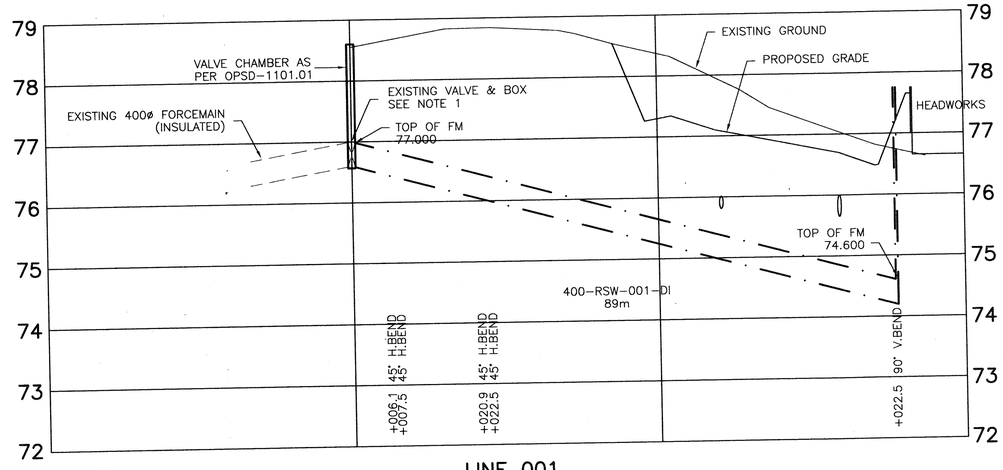

LINE 001

NOTES
1) REPLACE EXISTING VALVE AND BOX WITH NEW CONCRETE VALVE CHAMBER COMPLETE WITH AN AIR RELEASE VALVE TOP OF CHAMBER = 78.60

0 5 10m HORIZ.
0 0.5 1.0m VERT.

No.	Date	Revision
5	MARCH/98	AS BUILT
4	NOV/95	REVISED AS PER ADDENDUM No.3
3	OCT/95	ISSUED FOR TENDER
2	SEPT.15/95	ISSUED FOR REVIEW
1	JAN. 16/95	ISSUED FOR M.O.E.E. APPROVAL

McNEELY ENGINEERING CONSULTANTS LTD.

Owner: TOWNSHIP OF OSNABRUCK
Project: INGLESIDE SEWAGE TREATMENT PLANT
O.C.W.A. SEWAGE WORKS PROJECT No. 40-0797
Title: YARD PIPING PROFILES

Design	J.V.G.	Scale	AS SHOWN	Proj. No. M2544-4	Dwg No. G-9
Drawn	E.C.	Check	D.W.L.	Date SEPT.15/95	

AS BUILT

NOTE: REVISED "AS-BUILT" DRAWING. THIS DRAWING HAS BEEN REVISED TO INCORPORATE CHANGES AS INDICATED IN THE CONTRACTOR'S MARKED UP DRAWINGS. CHANGES DONE BY OWNER/OCWA WITHOUT THE CONSULTANT'S INVOLVEMENT ARE NOT INCLUDED ON THE DRAWINGS. CONTRACTOR'S DRAWINGS ARE NOT VERIFIED ON SITE BY ENGINEER. THE ENGINEER DOES NOT TAKE RESPONSIBILITY FOR INFORMATION ON THIS DRAWING THAT IS IN CONFLICT WITH THE EXISTING CONDITION DUE TO INACCURATE OR MISSING INFORMATION ON SOURCE DOCUMENTS PROVIDED.

2544G-9

NOTES
1) WHERE INDICATED ON THE SUBDRAIN PLAN, CATCHBASINS ARE TO INCLUDE FOR A PERFORATED SUBDRAIN INSTALLATION ALL IN ACCORDANCE WITH OPSD-809.01. CB 5, 7 AND 8 ARE TO BE PROVIDED WITH A SUMP PUMP INLET PIPE TO THE BUILDING.

2) THE PIPE ACROSS THE HEADWORKS ROAD FROM CB 3 TO CB 2 SHALL BE 300mmø CSP, 2.0mm THICK, 7.0m LONG AND SET AT A GRADE OF 0.4%. PROVIDE A SHOP DRAWING OF CB 2 FOR APPROVAL.

3) ROADWAY OR WALKWAY CATCHBASINS TO BE AS PER OPSD-705.02 WITH HEAVY DUTY FRAME AND GRATE AS PER OPSD-400.10 AND CONCRETE COLLAR AROUND FRAME.

4) CB 2 TO BE A DITCH INLET MANHOLE AS PER OPSD-702.05 MODIFIED TO SUIT THE PIPE COVER NOTED (i.e.300mm). CONTRACTOR IS TO PROVIDE A SHOP DRAWING FOR APPROVAL. USE A GRATE TYPE 'B' 6:1 SLOPE. LOCATE THE MANHOLE OFF THE ROAD SURFACE SO THAT GRATING IS ENTIRELY WITHIN THE GRASSED AND/OR SHOULDER AREA. SLOPE THE GRATE DOWNWARD TOWARD THE ROAD.

AS BUILT

NOTE: REVISED "AS-BUILT" DRAWING. THIS DRAWING HAS BEEN REVISED TO INCORPORATE CHANGES AS INDICATED IN THE CONTRACTOR'S MARKED UP DRAWINGS. CHANGES DONE BY OWNER/OCWA WITHOUT THE CONSULTANT'S INVOLVEMENT ARE NOT INCLUDED ON THE DRAWINGS. CONTRACTOR'S DRAWINGS ARE NOT VERIFIED ON SITE BY ENGINEER. THE ENGINEER DOES NOT TAKE RESPONSIBILITY FOR INFORMATION ON THIS DRAWING THAT IS IN CONFLICT WITH THE EXISTING CONDITION DUE TO INACCURATE OR MISSING INFORMATION ON SOURCE DOCUMENTS PROVIDED.

0 5 10m HORIZ.
0 0.5 1.0m VERT.

No.	Date	Revision
5	MARCH/98	AS BUILT
4	NOV/95	REVISED AS PER ADDENDUM No.3
3	OCT/95	ISSUED FOR TENDER
2	SEPT.15/95	ISSUED FOR REVIEW
1	JAN. 16/95	ISSUED FOR M.O.E.E. APPROVAL

McNEELY ENGINEERING CONSULTANTS LTD.

Owner: TOWNSHIP OF OSNABRUCK
Project: INGLESIDE SEWAGE TREATMENT PLANT
O.C.W.A. SEWAGE WORKS PROJECT No. 40-0797
Title: YARD PIPING PROFILES

Design	J.V.G.	Scale	AS SHOWN	Proj. No.	M2544-4	Dwg No.
Drawn	E.C.	Check	D.W.L.	Date	SEPT.15/95	G-10

CULVERT SCHEDULE

	SPECIFICATIONS	
CULVERT ID	C1	C2
MATERIAL	CSP	CSP
DIAMETER (mm)	300	300
THICKNESS (mm)	1.6	1.6
LENGTH (mm)	12000	6000
INLET ELEV.	75.29	75.32
OUTLET ELEV.	74.75	74.85

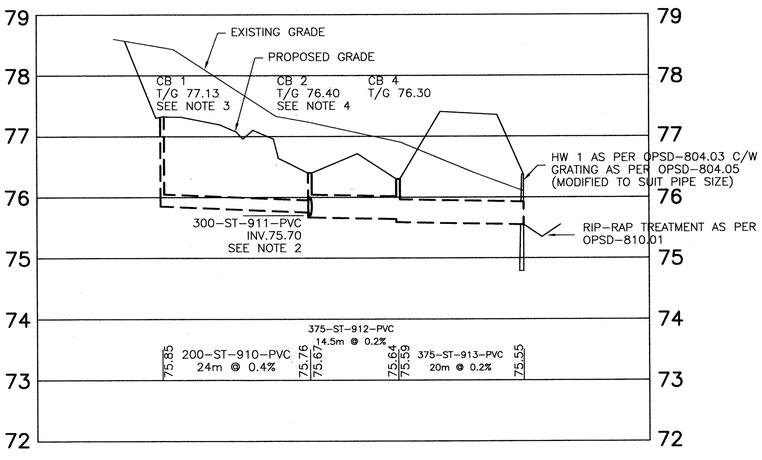

CB 1 TO HW 1

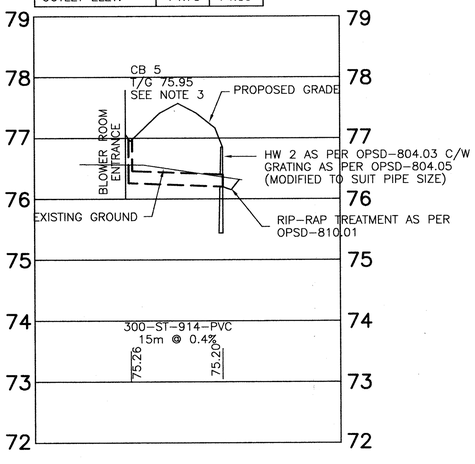

CB 5 TO HW 2

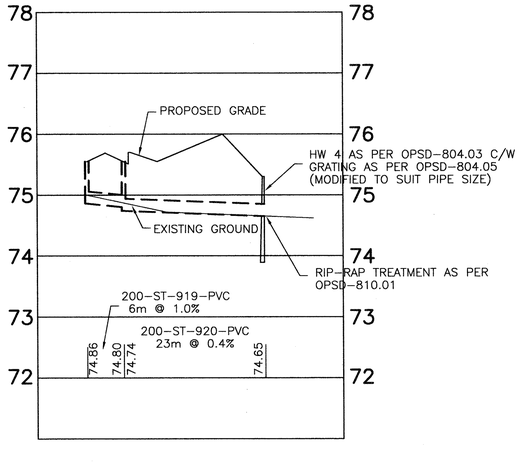

CB 9 TO HW 4

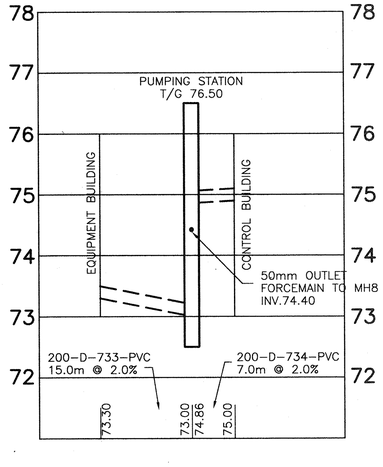

TILE DRAINS TO PUMP STATION

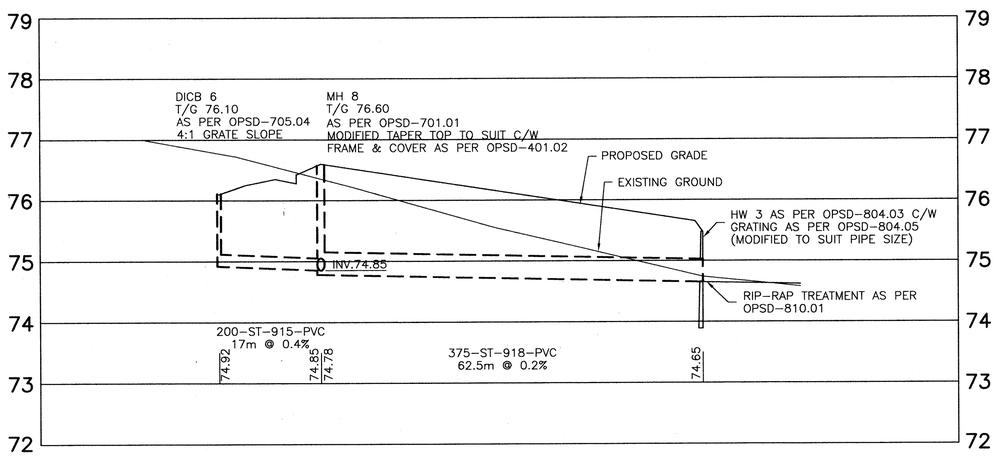

DICB 6 TO HW 3

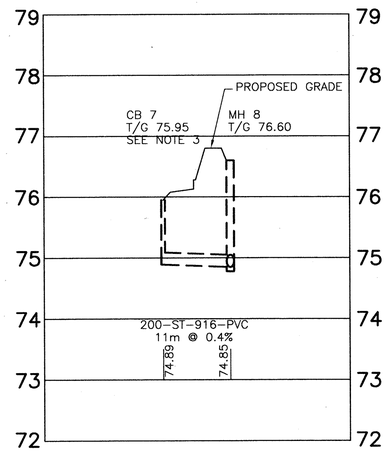

CB 7 TO MH 8

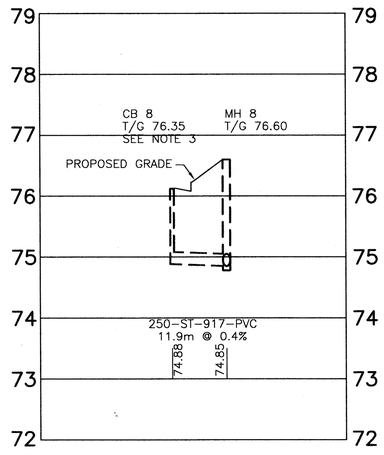

CB 8 TO MH 8

BUILDING DRAINS:

150-D-738-PVC TO CB8
100-D-735-PVC TO CB7
150-D-739-PVC TO CB5
SHALL BE SET OBVERT TO OBVERT AT THE CATCHBASIN AND HAVE A MINIMUM POSITIVE SLOPE OF 2%

25446-10

AS BUILT

NOTE: REVISED "AS-BUILT" DRAWING. THIS DRAWING HAS BEEN REVISED TO INCORPORATE CHANGES AS INDICATED IN THE CONTRACTOR'S MARKED UP DRAWINGS. CHANGES DONE BY OWNER/OCWA WITHOUT THE CONSULTANT'S INVOLVEMENT ARE NOT INCLUDED ON THE DRAWINGS. CONTRACTOR'S DRAWINGS ARE NOT VERIFIED ON SITE BY ENGINEER. THE ENGINEER DOES NOT TAKE RESPONSIBILITY FOR INFORMATION ON THIS DRAWING THAT IS IN CONFLICT WITH THE EXISTING CONDITION DUE TO INACCURATE OR MISSING INFORMATION ON SOURCE DOCUMENTS PROVIDED.

0 5 10m HORIZ.

0 0.5 1.0m VERT.

No.	Date	Revision
4	MARCH/98	AS BUILT
3	OCT/95	ISSUED FOR TENDER
2	SEPT.15/95	ISSUED FOR REVIEW
1	JAN. 16/95	ISSUED FOR M.O.E.E. APPROVAL

McNEELY ENGINEERING CONSULTANTS LTD.

Owner: TOWNSHIP OF OSNABRUCK

Project: INGLESIDE SEWAGE TREATMENT PLANT
O.C.W.A. SEWAGE WORKS PROJECT No. 40-0797

Title: SITE SECTIONS

Design	JVG	Scale	AS SHOWN	Proj. No.	M2544-4	Dwg No.
Drawn	PGO	Check	JVG	Date	SEPT.15/95	G11

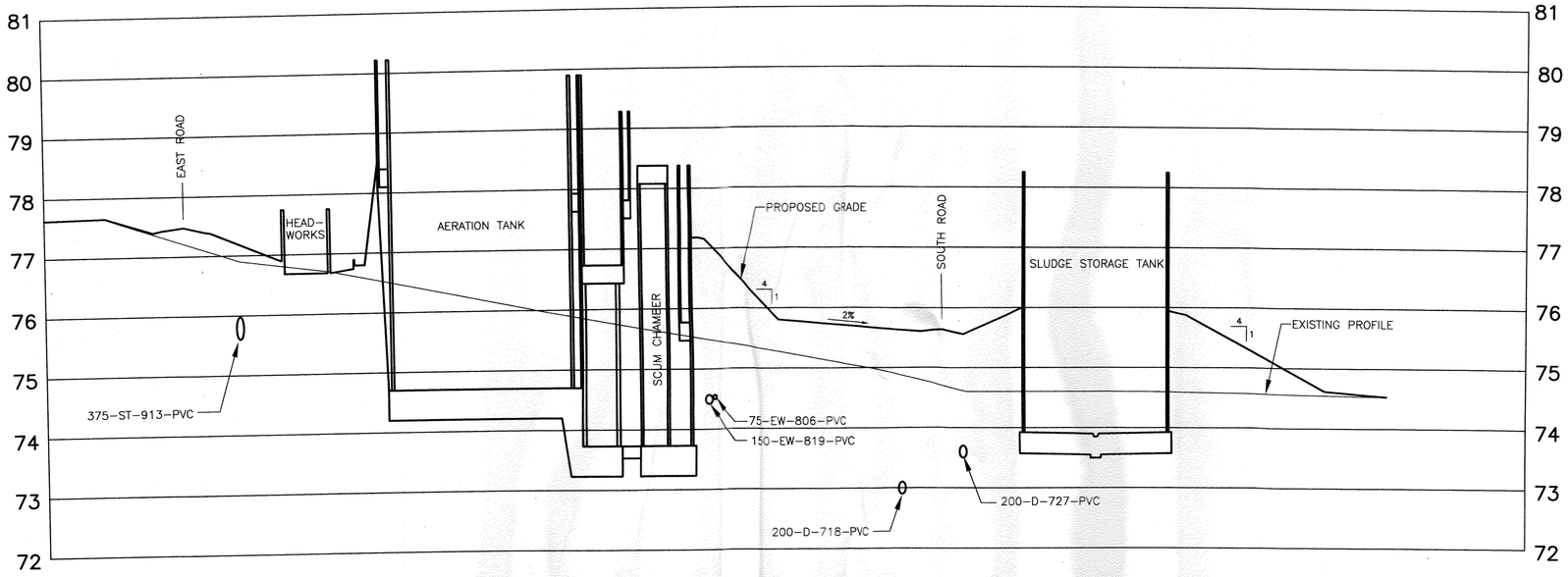

SECTION A-A

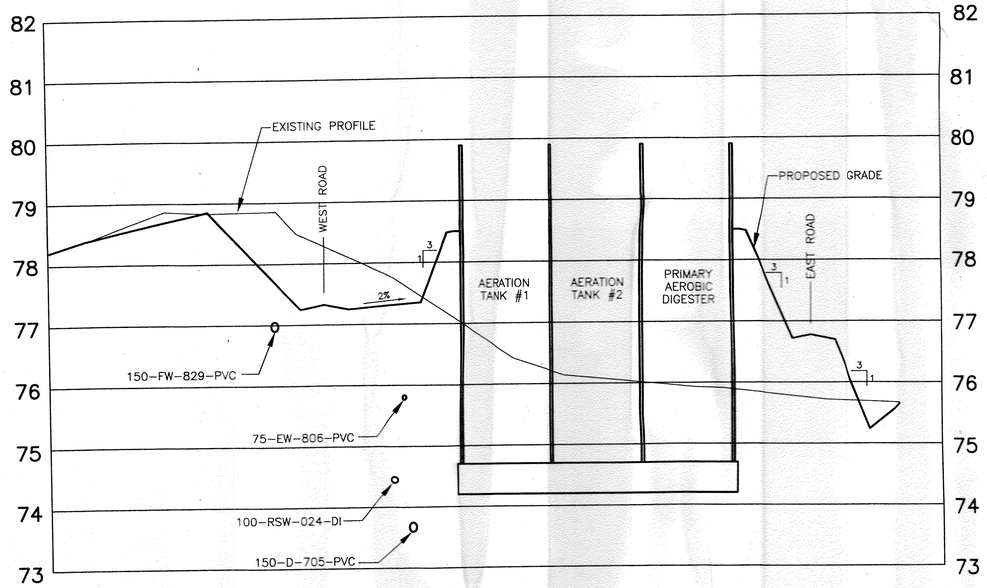

SECTION B-B

2544G-11

NOTE

THIS DRAWING DOES NOT REPRESENT AS-BUILT CONDITIONS.

NOTES:

1. ALL PROCESS PIPING DIAGRAMS SHALL BE READ IN CONJUNCTION WITH INSTRUMENTATION DATA SHEETS. NIPPLES AND CONNECTION POINTS OF INSTRUMENTATION DEVICES AS CALLED FOR ON INSTRUMENTATION DATA SHEETS ARE NOT SHOWN ON PROCESS PIPING DIAGRAMS FOR CLARITY. CONTRACTOR SHALL CO-ORDINATE ALL SHOP DRAWING ACTIVITIES TO ENSURE THAT THE REQUIREMENTS OF INSTRUMENTATION AND CONTROL ARE REFLECTED ON PIPE SPOOLS.
2. SECTIONS OF DI PIPE RECEIVING A FLOW ELEMENT SHALL BE UNLINED. (LENGTH OF UNLINED SECTION TO BE CO-ORDINATED WITH LENGTH OF FLOW ELEMENT.)
3. HYDRAULIC PROFILE IS BASED ON ALL TANKS AND UNITS IN SERVICE.

No.	Date	Revision
3	OCTOBER/95	ISSUED FOR TENDER
2	SEPT 15/95	ISSUED FOR REVIEW
1	JAN 16/95	ISSUED FOR M.O.E.E. APPROVAL

McNEELY ENGINEERING CONSULTANTS LTD.

Owner	TOWNSHIP OF OSNABRUCK
Project	INGLESIDE SEWAGE TREATMENT PLANT O.C.W.A. SEWAGE WORKS PROJECT No. 40-0797
Title	PLANT HYDRAULIC PROFILE

Design	H.A.I.	Scale	NONE	Proj. No.	M2544-4	Dwg No.	P-1
Drawn	GMC	Check	H.A.I.	Date	SEPT 15/95		

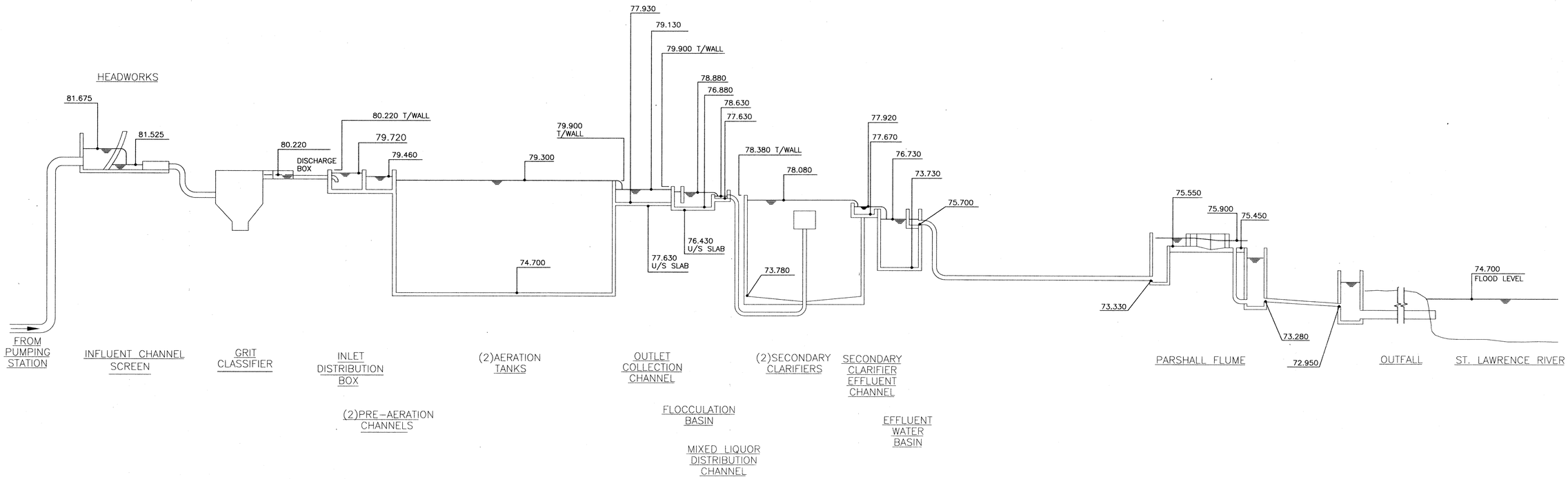

PEAK FLOW CONDITIONS – 10,027m³/DAY

LINE DESIGNATION (TYP.)

TRACING/INSULATION
LINE MATERIAL
LINE DESIGNATED NUMBER
PROCESS SERVICE
DIAMETER (mm)

100-RAS-235-DI-[ET+I]

LINE TYPES

- PIPE
- CHANNEL
- DIRECT CONNECTION

PROCESS-SERVICE

AA	AERATION AIR
ALUM	ALUMINUM SULPHATE
AR	AIR RELEASE
AS	AERATED SEWAGE
CA	COMPRESSED AIR
CB	CATCH BASIN
CE	CENTRATE
CLS	CHLORINE SOLUTION
CWS	CHEMICAL WASTE SLUDGE
D	DRAIN
DS	DIGESTED SLUDGE
EW	EFFLUENT WATER
FC	FERRIC CHLORIDE
FW	FILTERED WATER
HW	HEAD WALL
MW	MUNICIPAL WATER
OF	OVERFLOW
PAC	POWDERED ACTIVATED CARBON
PLY	POLYELECTROLYTE
RAS	RETURN ACTIVATED SLUDGE
RS	RECIRCULATING SCUM
RSD	RECIRCULATING SLUDGE DISCHARGE
RSS	RECIRCULATING SLUDGE SUCTION
RSW	RAW SEWAGE
RW	RECTANGULAR WEIR
S	SUPERNATANT
SA	SAMPLE
SAN	SANITARY DRAIN
SCE	SECONDARY CLARIFIER EFFLUENT
SCUM	SCUM
SLG	SLUICE GATE
SLG/RW	SLUICE GATE/RECTANGULAR WEIR
SLTG	SLIDING STOP GATE
SU	SLUDGE UNLOADING
ST	STORM WATER
NaOCL	SODIUM HYPOCHLORITE
NaOH	SODIUM HYDROXIDE
TB	THRUST BLOCK
TS	THICKENED SLUDGE
VENT	VENT (AIR)
VP	VENT (PUMP)
VW	V-NOTCHED WEIR
WAS	WASTE ACTIVATED SLUDGE

LINE MATERIAL

CPP	CONCRETE PRESSURE PIPE
CS	CARBON STEEL
CU	COPPER
DI	DUCTILE IRON
PE	POLYETHYLENE
PVC	POLYVINYL CHLORIDE
RR	REINFORCED RUBBER
SS	STAINLESS STEEL
TP	PVC TUBING

PIPE TRACING/INSULATION

I	INSULATED
ET	ELECTRIC TRACED
I+ET	INSULATED AND ELECTRIC TRACED

EQUIPMEN

- BLOWER (ENTRIFUGAL)
- BLOWER (LBE TYPE)
- COMPRESSO (RECIPROCATING)
- COMPRESSOR(TURBINE)
- GAS CYLINDER (INDICATE CONENTS)
- HEAT EXCHANGE
- MIXER (AGITATOR)
- NOZZLE
- PUMP (USE PREFI) SHOWN) C=CENTRIFUGAL PD=POSITIVE DISPLCEMENT M=METERING S=SUBMERSIBLE
- SILENCER
- TANK (CLOSED)
- TANK (OPEN)
- V.S. VARIABLE SPEED
- PRESSURE VESSEL (HORIZONTAL)
- PRESSURE VESSEL VERTICAL
- PUMP (CIRCULATING)
- PUMP (SUMP)
- PUMP (VACUUM)
- PUMP (VERTICAL TURBINE)

PIPE CONNECTIONS

- BELL & SPIGOT
- B.F. BLIND FLANGE
- FLANGED
- MECHANICAL JOINT
- QUICK DISCONNECT
- SCREWED
- SOLDERED
- UNION
- VICTAULIC COUPLING
- WELDED

PIPING ACCESSORIES

- FLEXIBLE HOSE OR FLEXIBLE CONNECTION
- A PIPE ANCHOR (NO DEGREE OF FREEDOM)
- VIBRATION ABSORBER

PRIMARY ELEMENTS (FLOW RATE)

- FLUME
- M MAGNETIC FLOW METER
- PITOT TUBE (AVERAGING)
- PITOT TUBE (SINGLE)
- 8 POSITIVE DISPLACEMENT
- RECTANGULAR WEIR
- SLG/RW SLUICE GATE/ RECTANGULAR WEIR
- SONIC FLOW METER
- M STRAP ON FLOW METER
- TURBINE/PROPELLER
- V-NOTCH WEIR PLATE
- VENTURI METER/INSERT VENTURI

NOTE

THIS DRAWING DOES NOT REPRESENT AS-BUILT CONDITIONS.

VALVES

- AIR RELEASE
- BACK PRESSURE
- BALL
- BALL CHECK
- BUTTERFLY
- CHECK
- DIAPHRAGM
- DOUBLE DOOR CHECK
- FLARED INLET
- FOOT VALVE/STRAINER
- GATE
- GLOBE
- GLOBE ANGLE
- HOSE BIB
- KNIFE GATE
- MUD
- NEEDLE
- PINCH
- PLUG
- PRESSURE REDUCING
- PRESSURE REDUCING (SELF CONTAINED)
- SAFETY RELIEF
- SLIDING STOP GATE
- SLUICE GATE
- SQUARE HEAD COCK
- 3 WAY (INDICATE FLOW FOR MIXING OR DIVERTING)
- WEIGHTED CHECK
- YARD HYDRANT

VALVE ACTUATORS

- C.H.O. CHAIN OPERATED
- DIAPHRAGM
- DOUBLE ACTION PISTON (FAIL CLOSE)
- FLOAT
- G GEAR
- LEVER
- M MOTORIZED
- NON RISING STEM (HANDWHEEL)
- QUICK OPENING
- RISING STEM (HANDWHEEL)
- SINGLE ACTION PISTON (FAIL OPEN)
- S SOLENOID

ACCESSORIES

- B.F.P. BACKFLOW PREVENTER
- CHEMICAL DIFFUSER
- C.O. CLEANOUT (FITTING)
- C.O. CLEANOUT (FLOOR)
- F.D. #2 DRAIN (FLOOR) TYPE 1, AS SPECIFIED
- F.D. #2 DRAIN (FLOOR TRAPPED) TYPE 1, AS SPECIFIED
- R.D. DRAIN (ROOF)
- DRAIN (FUNNEL)
- EJECTOR
- EXPANSION JOINT & GUIDES
- FG FLOW SIGHT GLASS
- A INDICATES PLUMBING FIXTURE TYPE, AS SPECIFIED
- ORIFICE PLATE
- P PRESSURE DIFFERENTIAL
- PI5 PRESSURE GUAGE
- PI5 PRESSURE GAUGE (WITH DIAPHRAGM SEAL)
- REDUCER (CONCENTRIC)
- REDUCER (ECCENTRIC)
- ROTAMETER
- STRAINER (SELF CLEANING)
- STRAINER (DUPLEX)
- STRAINER (Y)
- TI1 THERMOMETER
- TRAP (HIGH PRESSURE STEAM)
- TRAP (BUCKET)
- TRAP (FLOAT & THERMOSTATIC)
- TRAP (RUNNING)
- VACUUM BREAKER
- VENT (AUTOMATIC AIR)
- M.V. VENT (MANUAL AIR)

No.	Date	Revision
3	OCTOBER/95	ISSUED FOR TENDER
2	SEPT 15/95	ISSUED FOR REVIEW
1	JAN 16/95	ISSUED FOR M.O.E.E. APPROVAL

H.A. Ibrahim — 95/06/15
D.W. Eichman — 95/06/15

McNEELY ENGINEERING CONSULTANTS LTD.

Owner	TOWNSHIP OF OSNABRUCK
Project	INGLESIDE SEWAGE TREATMENT PLANT O.C.W.A. SEWAGE WORKS PROJECT No. 40-0797
Title	PROCESS DIAGRAM - LEGEND

Design	H.A.I.	Scale	NONE	Proj. No.	M2544-4	Dwg No.	P-2
Drawn	T.H.	Check	H.A.I.	Date	SEPT 15/95		

NOTE

THIS DRAWING DOES NOT REPRESENT AS-BUILT CONDITIONS.

NOTES:

1. ALL PROCESS PIPING DIAGRAMS SHALL BE READ IN CONJUNCTION WITH INSTRUMENTATION DATA SHEETS. NIPPLES AND CONNECTION POINTS OF INSTRUMENTATION DEVICES AS CALLED FOR ON INSTRUMENTATION DATA SHEETS ARE NOT SHOWN ON PROCESS PIPING DIAGRAMS FOR CLARITY. CONTRACTOR SHALL CO-ORDINATE ALL SHOP DRAWING ACTIVITIES TO ENSURE THAT THE REQUIREMENTS OF INSTRUMENTATION AND CONTROL ARE REFLECTED ON PIPE SPOOLS.

2. SECTIONS OF DI PIPE RECEIVING A FLOW ELEMENT SHALL BE UNLINED. (LENGTH OF UNLINED SECTION TO BE CO-ORDINATED WITH LENGTH OF FLOW ELEMENT.)

No.	Date	Revision
3	OCTOBER/95	ISSUED FOR TENDER
2	SEPT 15/95	ISSUED FOR REVIEW
1	JAN 16/95	ISSUED FOR M.O.E.E. APPROVAL

REGISTERED PROFESSIONAL ENGINEER H.A. Ibrahim DATE 95 09 16 PROVINCE OF ONTARIO

REGISTERED PROFESSIONAL ENGINEER D.W. Lishman DATE SEP 6 1995 PROVINCE OF ONTARIO

McNEELY ENGINEERING CONSULTANTS LTD.

Owner: TOWNSHIP OF OSNABRUCK

Project: INGLESIDE SEWAGE TREATMENT PLANT
O.C.W.A. SEWAGE WORKS PROJECT No. 40-0797

Title: PROCESS DIAGRAM – SUMMARY

Design	H.A.I.	Scale	NONE	Proj. No.	M2544-4	Dwg No.
Drawn	T.H.	Check	H.A.I.	Date	SEPT 15/95	P-3

HYDROPNEUMATIC TANKS
H.B. AT CONTROL BLDG.
EFFLUENT WATER
ACTIVATED CARBON CANISTER
CC-1
CC-2
VENT TO ODOUR CONTROL
MANUAL BAR SCREEN
SLG1
SLG2
SLG3
SLG4
SLG5
SLG6
SLG7
COVERED CHANNEL
CURVED BAR SCREEN
GRIT CLASSIFIER
CHUTES
TROUGHS
SCREENINGS BIN
GRIT DECANTER
H.B. AT HEADWORKS 2nd FLOOR
H.B. AT HEADWORKS GROUD FLOOR
HEADWORKS BY-PASS
MAIN FLOW RAW SEWAGE
RAW SEWAGE FORCEMAIN
FROM SEWAGE PUMPING STATION
AUTO SAMPLER & ENCLOSURE
POSITIVE DISPLACEMENT AERATION BLOWERS
AIR
RAS
WAS
DRAIN
SCUM
SCUM STAND-BY
INLET DISTRIBUTION BOX
(TWO) PRE-AERATION CHANNELS
FINE BUBBLE DIFFUSERS
COARSE BUBBLE DIFFUSERS
MUD VALVE
(TWO) AERATION TANKS
RAS TO AERATION TANK #2
RAS TO AERATION TANK #1
WAS STAND-BY
STAND-BY LINE
M.H. 5
M.H. 4
M.H. 3
M.H. 2
M.H. 1
M.H. 6
M.H. 7
BY-PASS
VALVE CHAMBER
P-21
P-22
SUBMERSIBLE PUMPING STATION
H.B. AT PUMPING STN.
PRIMARY AEROBIC DIGESTER
SECONDARY AEROBIC DIGESTER
H.B. IN CHLORINE ROOM
H.B. IN ALUM ROOM
P-16,17,18
SODIUM HYPOCHLORITE FEED SYSTEM
SODIUM HYPOCHLORITE
P-27, 28
ALUM FEED SYSTEM (OR IRON SALT)
ALUM (OR IRON SALT)
TO SECONDARY CLARIFIER EFFLUENT WEIRS
MIXED LIQUOR DISTRIBUTION CHANNEL
FLOCCULATION BASIN BYPASS
FLOCCULATION BASIN
(TWO) SECONDARY CLARIFIERS
FLOW
H.B. ON ROOF AT CLARIFIER #1
FROM TANK #2
FROM TANK #1
RAS/WAS PUMPS
P-1
P-2
P-3
LOW LIFT PUMPS (P-23 & P-24)
HIGH LIFT PUMPS (P-25 & P-26)
EFFLUENT WATER BASIN
SCUM RECIRCULATING LINE
SCUM CHAMBER
P-8
DISINFECTING LINE
POLYMER LINE
H.B. IN POLYMER ROOM
MUNICIPAL WATER IN
B.F.P.
SCREW FEEDER c/w HEATER, LOW HOPPER CONTROL, AND MIXER
POLYMER BLENDING SYSTEM
POLYMER FEED PUMPS (P-12 & P-13)
POLYMER HOLDING TANK
MIXING TANK
AGING TANK
CHLORINE ANALYZER PROBE AND CABLE TO ANALYZER LOCATED IN BLOWER ROOM (TO BE PROVIDED BY DIV. 16)
POLYMER FEED PUMPS (P-14 & P-15)
POLYMER FEED SYSTEM
EFFLUENT WATER
H.B. AT PARSHALL FLUME
PARSHALL FLUME
CHLORINE ANALYZER CABLE TO ANALYZER PROBE LOCATED AT EFFLUENT WATER BASIN (TO BE PROVIDED BY DIVISION 16)
EFFLUENT OUTFALL TO ST. LAWRENCE RIVER
AUTO SAMPLER
CHLORINE ANALYZER
POLYMER LINE
FLUSH LINE
CENTRIFUGE BY-PASS LINE
CENTRIFUGE
H.B. AT CENTRIFUGE BUILDING
STATIC MIXER
THICKENED SLUDGE
THICKENED SLUDGE COLLECTION TANK
P-9
P-10
P-11
H.B. AT SLUDGE TANK
SLUDGE STORAGE TANK
H.B. AT SLUDGE LOADING PLATFORM
WASTE SLUDGE DISPOSAL
CATCHBASIN
LOADING BAY

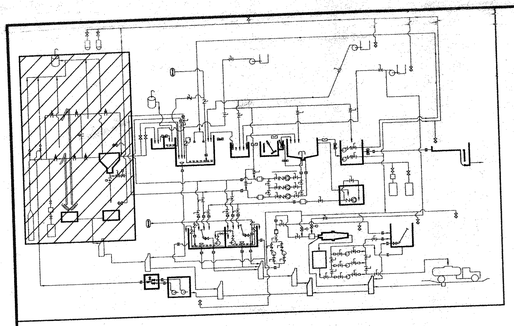

NOTE

THIS DRAWING DOES NOT REPRESENT AS-BUILT CONDITIONS.

NOTES:

1. ALL PROCESS PIPING DIAGRAMS SHALL BE READ IN CONJUNCTION WITH INSTRUMENTATION DATA SHEETS. NIPPLES AND CONNECTION POINTS OF INSTRUMENTATION DEVICES AS CALLED FOR ON INSTRUMENTATION DATA SHEETS ARE NOT SHOWN ON PROCESS PIPING DIAGRAMS FOR CLARITY. CONTRACTOR SHALL CO-ORDINATE ALL SHOP DRAWING ACTIVITIES TO ENSURE THAT THE REQUIREMENTS OF INSTRUMENTATION AND CONTROL ARE REFLECTED ON PIPE SPOOLS.

2. SECTIONS OF DI PIPE RECEIVING A FLOW ELEMENT SHALL BE UNLINED. (LENGTH OF UNLINED SECTION TO BE CO-ORDINATED WITH LENGTH OF FLOW ELEMENT.)

No.	Date	Revision
3	OCTOBER/95	ISSUED FOR TENDER
2	SEPT 15/95	ISSUED FOR REVIEW
1	JAN 16/95	ISSUED FOR M.O.E.E. APPROVAL

H.A. Ibrahim — 96/6/95

D.W. Fishman — 96/6/95

McNEELY ENGINEERING CONSULTANTS LTD.

Owner	TOWNSHIP OF OSNABRUCK
Project	VILLAGE OF INGLESIDE SEWAGE TREATMENT PLANT O.C.W.A. SEWAGE WORKS PROJECT No. 40-0797
Title	PROCESS DIAGRAM I

Design	H.A.I.	Scale	NONE	Proj. No. M2544-4	Dwg No.
Drawn	GMc	Check	H.A.I.	Date SEPT 15/95	P-4

150-VENT-183-PVC
75-VENT-184-PVC
ACTIVATED CARBON CANISTER CC-1
V-139
75-VENT-180-PVC
75-VENT-180-PVC
50-VENT-178-PVC
REMOVABLE COVER
MANUAL BAR SCREEN
DRIP TRAY
SLG19
SLG24
SLG23
COVERED CHANNEL
PIPE
D811
150X75
50-AR-186-PVC
HEADWORKS BY-PASS
50-VENT-177-PVC
COVERED CHANNEL
350-RSW-005-DI (BY-PASS)
75-VENT-179-PVC
SLG21
HOSE-BIB HB-001
ENCLOSURE
RAKE MECHANISM
WIPER MECHANISM
SCREENINGS
PERFORATED TRAY
DRAIN
V-179
V-178
V-177
V-176
50-AR-176-PVC
50-AR-181-PVC
SLG18
SLG20
SLG22
COVERED CHANNEL
GRIT CLASSIFIER
INSULATED AND HEAT TRACED
300-RSW-003-DI-I+ET
DISCHARGE BOX
DWG. NO. P-5 TO INLET DISTRIBUTION BOX
350-RSW-004-DI-I+ET
D809
COVERED CHANNEL
CURVED BAR SCREEN
DEGRITTED SEWAGE
SEPARATED GRIT
SCREEN
V-817
V-816
[I+ET]
38-EW-809-SS-I+ET
10 mm I.D. VINYL OR TEFLON LINED POLYETHELENE TUBING w/ PROTECTIVE COATING AS SUPPLIED BY THE MANUFACTURER.
CHUTE
CHUTE
25-EW-811-SS-I+ET 25mm FLUIDIZING LINE (50 gpm @ 50 psig)
V-013
HOSE-BIB HB-002
RAW SEWAGE 400-RSW-002-DI-I+ET (2m BELOW & ABOVE GRADE)
RAW SEWAGE FORCEMAIN 100-RSW-025-DI-I+ET (2m BELOW & ABOVE GRADE)
V-901
SCREEN
V-902
TROUGHS
25-EW-810-PVC
D807
D808
75X25
75X38
45° ELBOW
DWG. NO. P-10 FROM EFFLUENT WATER DISTRIBUTION SYSTEM
75-EW-806-PVC
50-RSW-028-DI-I+ET
50-RSW-029-DI-I+ET
38-EW-808-PVC
AUTO SAMPLER & ENCLOSURE
SAMPLING
INSULATED AND HEAT TRACED
DRAIN TRAY
V-012
50ø HOSE (H-3)
.75ø HOSE (H-1)
50ø HOSE (H-2)
V-011
V-010
INSULATED AND HEAT TRACED
HEATED CONCRETE PAD
GRADE
LIMIT OF CONTRACT
GRADE
400 øPVC, POLYETHYLENE OR DI PIPE (BY OTHERS)
FROM SEWAGE PUMPING STATION
400-RSW-001-DI (2m BELOW GRADE)
BY-PASS
100-RSW-024-DI (2m BELOW GRADE)
DWG. NO. P-10 FROM SUBMERSIBLE PUMPING STATION
SEE DWG. # P-5 TO MH4
150-D-705-PVC
M.H. 5
150-D-704-PVC
SCREENINGS BIN
GRIT DECANTER
GRIT REMOVAL SYSTEM

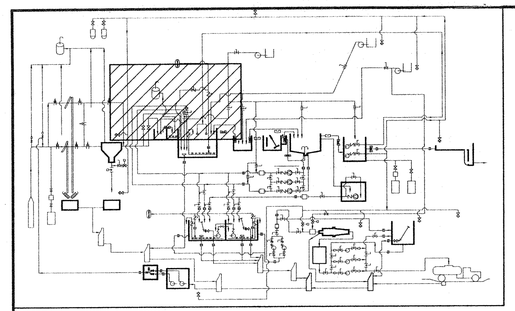

NOTE

THIS DRAWING DOES NOT REPRESENT AS-BUILT CONDITIONS.

NOTES:

1. ALL PROCESS PIPING DIAGRAMS SHALL BE READ IN CONJUNCTION WITH INSTRUMENTATION DATA SHEETS. NIPPLES AND CONNECTION POINTS OF INSTRUMENTATION DEVICES AS CALLED FOR ON INSTRUMENTATION DATA SHEETS ARE NOT SHOWN ON PROCESS PIPING DIAGRAMS FOR CLARITY. CONTRACTOR SHALL CO-ORDINATE ALL SHOP DRAWING ACTIVITIES TO ENSURE THAT THE REQUIREMENTS OF INSTRUMENTATION AND CONTROL ARE REFLECTED ON PIPE SPOOLS.

2. SECTIONS OF DI PIPE RECEIVING A FLOW ELEMENT SHALL BE UNLINED. (LENGTH OF UNLINED SECTION TO BE CO-ORDINATED WITH LENGTH OF FLOW ELEMENT.)

No.	Date	Revision
3	OCTOBER/95	ISSUED FOR TENDER
2	SEPT 15/95	ISSUED FOR REVIEW
1	JAN 16/95	ISSUED FOR M.O.E.E. APPROVAL

McNEELY ENGINEERING CONSULTANTS LTD.

Owner	TOWNSHIP OF OSNABRUCK
Project	INGLESIDE SEWAGE TREATMENT PLANT O.C.W.A. SEWAGE WORKS PROJECT No. 40-0797
Title	PROCESS DIAGRAM II

Design	H.A.I.	Scale	NONE	Proj. No. M2544-4	Dwg No. P-5
Drawn	GMc	Check	H.A.I.	Date SEPT 15/95	

150-RAS-II-212/214/216-DI
SEE DWG. # P-10 FROM RAS/WAS PUMP #1
V-215
D817
V-126
SLG #8 (SCUM)
SLG #6
250-RSW-010-DI
350-RSW-027-DI
PRE-AERATION CHANNEL #2
(COVERED)
MOISTURE BLOW-OFF
FINE BUBBLE DIFFUSERS
NOTE: SUBMERGED AIR PIPING, DIFFUSERS, LAYOUT AND INSTALLATION DETAILS AS PER MANUFACTURERS RECOMMENDATIONS
DROP LEG 100-AA-125-SS
SS
PVC
MUD VALVE V-702
100-AA-121-SS
150X100
INSERT ON FLOW METER CONNECTION 38-AA-130-SS
V-131
150-AA-119-SS
INSERT ON FLOW METER CONNECTION 38-AA-134-SS
V-135
V-124
200X150
INSERT ON FLOW METER CONNECTION 38-AA-128-SS
V-129
200-AA-117-SS
250X200
50-ALUM-405-PVC
100-EW-822-SS-I+ET
(SEE P-10 FOR LINE SIZES AND NUMBERS IN TANK #2)
SEE DWG. # P-10 FROM EFFLUENT WATER DISTRIBUTION SYSTEM
V-133
V-122
INSERT ON FLOW METER CONNECTION 38-AA-132-SS
V-421
50-ALUM-404-PVC
SEE DWG. # P-9 FROM ALUM FEED SYSTEM
SLG/RW #4
V-422
SEE DWG. # P-9 FROM POLYMER FEED SYSTEM
V-423
V-613
SLG #10 (SCUM)
SLG #12
RW
OUTLET COLLECTION CHANNEL #2
50-ALUM-406-PVC
250-AA-113-SS
300-AS-019-DI
SEE DWG. # P-6 TO SECONDARY CLARIFIER #2
SEE DWG. # P-4 FROM GRIT REMOVAL SYSTEM
350-RSW-004-DI-I+ET
D812
V-003
350-RSW-008-DI
150-VENT-187-PVC
100-D-709-DI
100-D-710-DI
AERATION TANK # 2
200-AA-116-SS
INSERT ON FLOW METER CONNECTION 38-AA-129-SS
INSERT ON FLOW METER CONNECTION 38-AA-133-SS
INSERT ON FLOW METER CONNECTION 38-AA-127-SS
V-002
350-RSW-006-DI
V-001
V-130
V-128
SLG #9 (SCUM)
50-ALUM-407-PVC
25-POLY-600-PVC
SLG #11
RW
CONCRETE BAFFLE
FLOCCULATOR
SLG #15
SLG #13
SLG #14
MIXED LIQUOR DISTRIBUTION CHANNEL
300-AS-018-DI
300-AS-020-DI
300-AS-017-DI
TO SCUM CHAMBER
FLOCCULATION BASIN
SEE DWG. # P-6 TO SECONDARY CLARIFIER #1
SEE DWG. #10 FROM RAS/WAS PUMP #2
D816
V-214
150-RAS-II-211/213/215-DI
V-125
100-AA-120-SS
150X100
150-AA-118-SS
200X150
250X200
V-134
V-123
V-132
V-121
INSERT ON FLOW METER CONNECTION 38-AA-131-SS
SLG/RW #3
ACTIVATED CARBON CANISTER CC-2
150-VENT-182-PVC
150-VENT-185-PVC
V-140
SLG #7 (SCUM)
SLG #5
250-RSW-009-DI
350-RSW-026-DI
350-RSW-007-DI-I+ET
DROP LEG 100-AA-124-SS
MOISTURE BLOW-OFF
FINE BUBBLE DIFFUSERS
NOTE: SUBMERGED AIR PIPING, DIFFUSERS, LAYOUT AND INSTALLATION DETAILS AS PER MANUFACTURERS RECOMMENDATIONS
MUD VALVE V-701
DROP LEG 100-AA-122-SS
INSERT ON FLOW METER CONNECTION 38-AA-126-SS
V-127
SEE DWG. #9 FROM CHLORINATION SYSTEM
V-536
20-CLS-504-PVC-I+ET
SLG/RW #2
SLG/RW #1
INLET DISTRIBUTION BOX
AERATION TANK # 1
100-D-708-DI
250-AA-113-SS
SEE DWG. # P-8 FROM AERATION BLOWER
100-EW-821-SS-I+ET
(SEE P-10 FOR LINE SIZES AND NUMBERS IN TANK #1)
SEE DWG. # P-10 FROM EFFLUENT WATER DISTRIBUTION SYSTEM
SEE DWG. # P-4 FROM MH5
150-D-705-PVC
100-D-710-DI
D838
M.H. 4
200-D-729-PVC
SEE DWG. # P-10 TO MH3 THEN PUMPING STATION

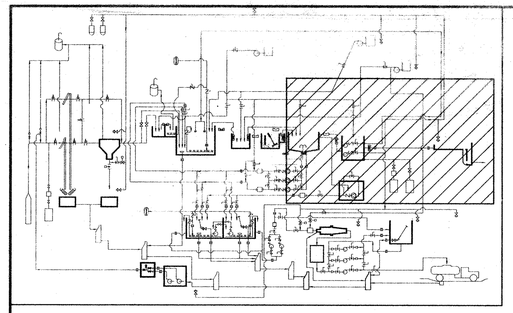

NOTE

THIS DRAWING DOES NOT REPRESENT AS-BUILT CONDITIONS.

NOTES:

1. ALL PROCESS PIPING DIAGRAMS SHALL BE READ IN CONJUNCTION WITH INSTRUMENTATION DATA SHEETS. NIPPLES AND CONNECTION POINTS OF INSTRUMENTATION DEVICES AS CALLED FOR ON INSTRUMENTATION DATA SHEETS ARE NOT SHOWN ON PROCESS PIPING DIAGRAMS FOR CLARITY. CONTRACTOR SHALL CO-ORDINATE ALL SHOP DRAWING ACTIVITIES TO ENSURE THAT THE REQUIREMENTS OF INSTRUMENTATION AND CONTROL ARE REFLECTED ON PIPE SPOOLS.

2. SECTIONS OF DI PIPE RECEIVING A FLOW ELEMENT SHALL BE UNLINED. (LENGTH OF UNLINED SECTION TO BE CO-ORDINATED WITH LENGTH OF FLOW ELEMENT.)

3. ALL CHLORINE SOLUTION PIPING SHOULD BE PROVIDED WITH ADEQUATE DRAIN CONNECTIONS AND SLOPED TOWARDS THE CHEMICAL ROOM.

No.	Date	Revision
3	OCTOBER/95	ISSUED FOR TENDER
2	SEPT 15/95	ISSUED FOR REVIEW
1	JAN 16/95	ISSUED FOR M.O.E.E. APPROVAL

REGISTERED PROFESSIONAL ENGINEER H.A. Ibrahim PROVINCE OF ONTARIO — Sept 15/95

REGISTERED PROFESSIONAL ENGINEER D.W. Lishman PROVINCE OF ONTARIO — Sept 15/95

McNEELY ENGINEERING CONSULTANTS LTD.

Owner	TOWNSHIP OF OSNABRUCK
Project	INGLESIDE SEWAGE TREATMENT PLANT O.C.W.A. SEWAGE WORKS PROJECT No. 40-0797
Title	PROCESS DIAGRAM III

Design	H.A.I.	Scale	NONE	Proj. No. M2544-4	Dwg No. P-6
Drawn	GMc	Check	H.A.I.	Date SEPT 15/95	

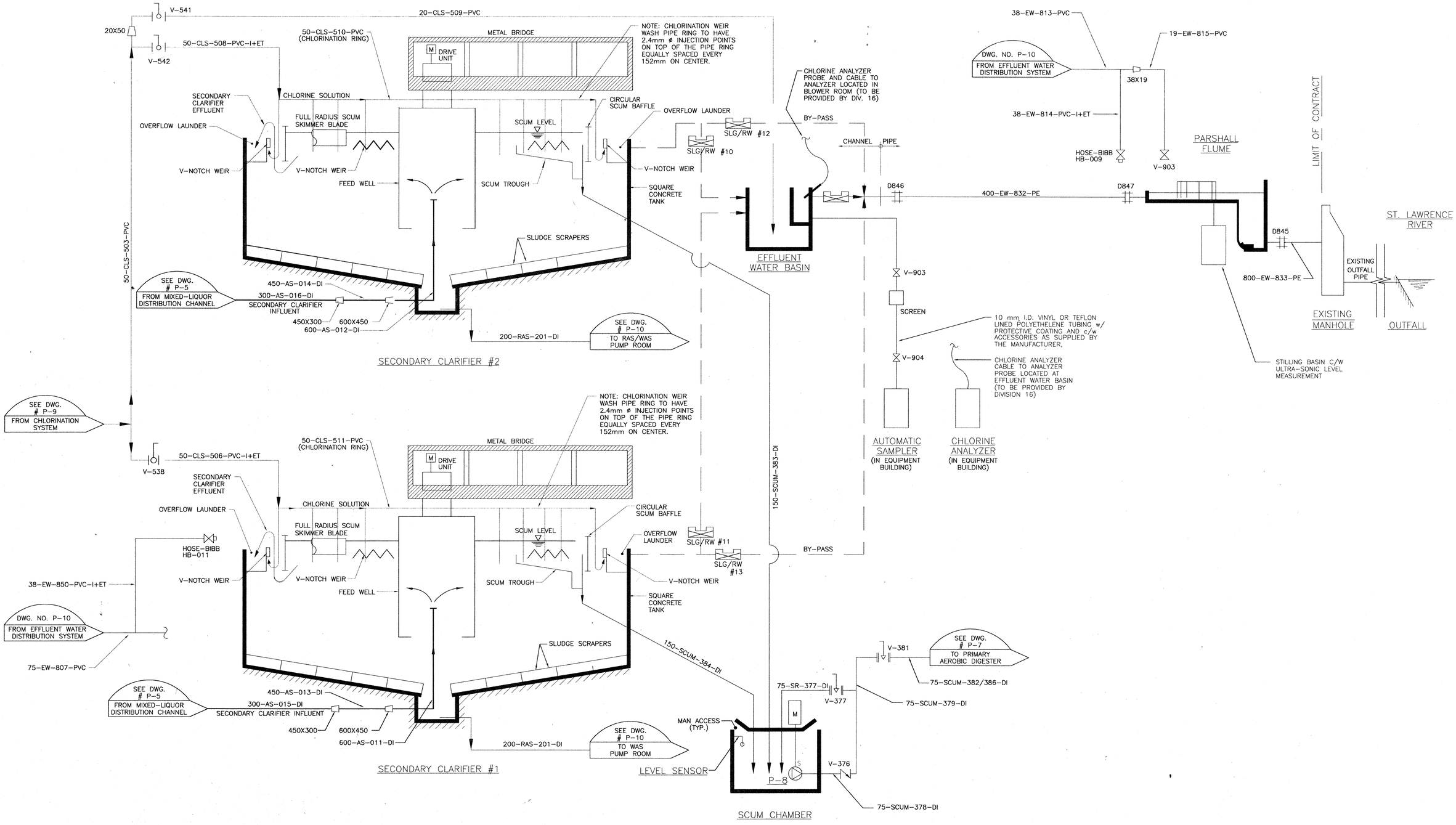

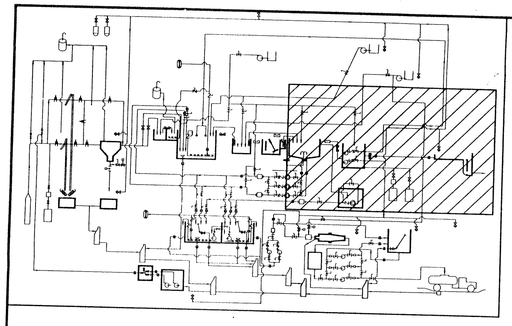

NOTE

THIS DRAWING DOES NOT REPRESENT AS-BUILT CONDITIONS.

NOTES:

1. ALL PROCESS PIPING DIAGRAMS SHALL BE READ IN CONJUNCTION WITH INSTRUMENTATION DATA SHEETS. NIPPLES AND CONNECTION POINTS OF INSTRUMENTATION DEVICES AS CALLED FOR ON INSTRUMENTATION DATA SHEETS ARE NOT SHOWN ON PROCESS PIPING DIAGRAMS FOR CLARITY. CONTRACTOR SHALL CO-ORDINATE ALL SHOP DRAWING ACTIVITIES TO ENSURE THAT THE REQUIREMENTS OF INSTRUMENTATION AND CONTROL ARE REFLECTED ON PIPE SPOOLS.
2. SECTIONS OF DI PIPE RECEIVING A FLOW ELEMENT SHALL BE UNLINED. (LENGTH OF UNLINED SECTION TO BE CO-ORDINATED WITH LENGTH OF FLOW ELEMENT.)
3. ALL CHLORINE SOLUTION PIPING SHOULD BE PROVIDED WITH ADEQUATE DRAIN CONNECTIONS AND SLOPED TOWARDS THE CHEMICAL ROOM.

No.	Date	Revision
3	OCTOBER/95	ISSUED FOR TENDER
2	SEPT 15/95	ISSUED FOR REVIEW
1	JAN 16/95	ISSUED FOR M.O.E.E. APPROVAL

REGISTERED PROFESSIONAL ENGINEER H.A. Ibrahim PROVINCE OF ONTARIO — Oct 6/95

REGISTERED PROFESSIONAL ENGINEER D.W. Lishman PROVINCE OF ONTARIO — Oct 6/95

McNEELY ENGINEERING CONSULTANTS LTD.

Owner	TOWNSHIP OF OSNABRUCK				
Project	INGLESIDE SEWAGE TREATMENT PLANT O.C.W.A. SEWAGE WORKS PROJECT No. 40-0797				
Title	PROCESS DIAGRAM III				
Design	H.A.I.	Scale	NONE	Proj. No. M2544-4	Dwg No. P-6
Drawn	GMc	Check	H.A.I.	Date SEPT 15/95	

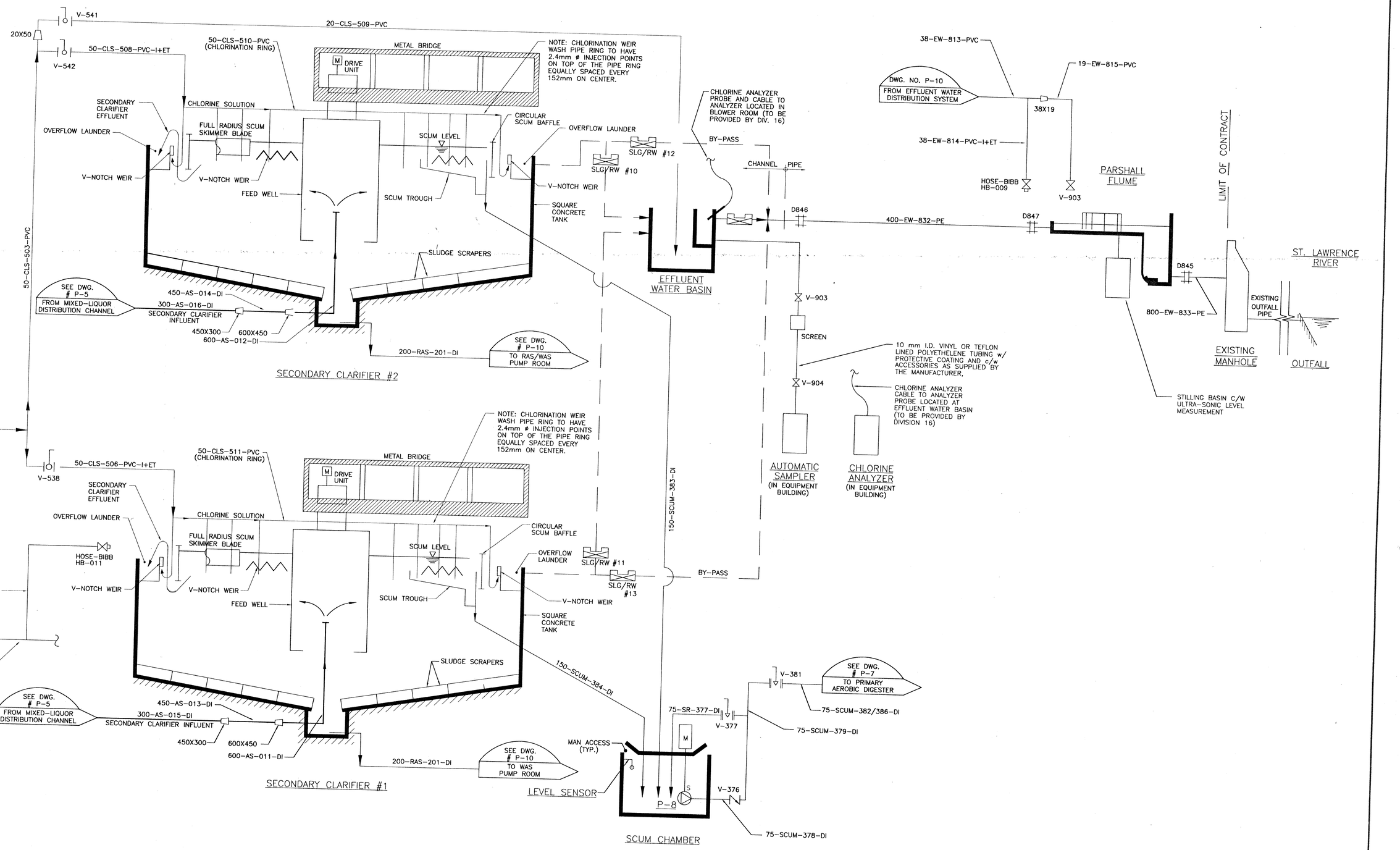

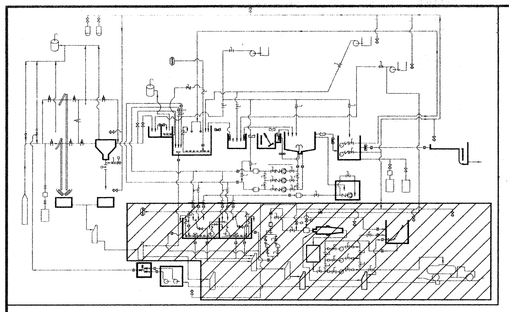

NOTE

THIS DRAWING DOES NOT REPRESENT AS-BUILT CONDITIONS.

NOTES:

1. ALL PROCESS PIPING DIAGRAMS SHALL BE READ IN CONJUNCTION WITH INSTRUMENTATION DATA SHEETS. NIPPLES AND CONNECTION POINTS OF INSTRUMENTATION DEVICES AS CALLED FOR ON INSTRUMENTATION DATA SHEETS ARE NOT SHOWN ON PROCESS PIPING DIAGRAMS FOR CLARITY. CONTRACTOR SHALL CO-ORDINATE ALL SHOP DRAWING ACTIVITIES TO ENSURE THAT THE REQUIREMENTS OF INSTRUMENTATION AND CONTROL ARE REFLECTED ON PIPE SPOOLS.

2. SECTIONS OF DI PIPE RECEIVING A FLOW ELEMENT SHALL BE UNLINED. (LENGTH OF UNLINED SECTION TO BE CO-ORDINATED WITH LENGTH OF FLOW ELEMENT.)

No.	Date	Revision
3	OCTOBER/95	ISSUED FOR TENDER
2	SEPT 15/95	ISSUED FOR REVIEW
1	JAN 16/95	ISSUED FOR M.O.E.E. APPROVAL

REGISTERED PROFESSIONAL ENGINEER H.A. Ibrahim PROVINCE OF ONTARIO — Dec 6/95

REGISTERED PROFESSIONAL ENGINEER D.W. Lishman PROVINCE OF ONTARIO — Dec 6 1995

McNEELY ENGINEERING CONSULTANTS LTD.

Owner	TOWNSHIP OF OSNABRUCK
Project	INGLESIDE SEWAGE TREATMENT PLANT O.C.W.A. SEWAGE WORKS PROJECT No. 40-0797
Title	PROCESS DIAGRAM IV

Design	H.A.I.	Scale	NONE	Proj. No. M2544-4	Dwg No. P-7
Drawn	GMc	Check	H.A.I.	Date SEPT 15/95	

SEE DWG. # P-10 FROM RAS/WAS PUMP #1 — 150-RAS-I-211-DI — V-253 — V-251 — SEE DWG. # P-5 TO AERATION TANK #1

SEE DWG. # P-10 FROM RAS/WAS PUMP #2 — 150-RAS-II-212-DI — V-254

SEE DWG. # P-6 FROM SCUM CHAMBER — 75-SCUM-382/386-DI — D832 — V-382

75-SCUM-387/389-DI — 100-WAS-253/257-DI — D836 — D820 — D818 — 150-D-723-DI

100-WAS-251/255-DI

V-136 — INSERT ON FLOW METER CONNECTION 38-AA-135-SS — SEE DWG. # P-8 FROM DIGESTER BLOWERS — 400-AA-111-SS — 400X200

SEE DWG. # P-5 TO AERATION TANK #2

300-AA-115-SS — V-138 — INSERT ON FLOW METER CONNECTION 38-AA-137-SS — V-120

100-WAS-252/256-DI STAND-BY — V-252 — 100-WAS-254/258-DI STANDBY

200-AA-114-SS — V-137 — INSERT ON FLOW METER CONNECTION 38-AA-136-SS — V-119

V-383 — 75-SCUM-386-DI — RECIRCULATING LINE — 100-DS-301-DI

100-DS-302-DI — V-302 — 75-SCUM-388/390-DI STAND-BY

D819 — D837 — D821 — 150-D-725-DI

B.F. — SS — PVC — SWIVEL JOINT — V-705 — V-305 — 150-D-723-DI — 150-D-725-DI — D841

MOISTURE BLOW-OFF — COARSE BUBBLE DIFFUSERS — P-4 — D839

NOTE: SUBMERGED AIR PIPING, DIFFUSERS, LAYOUT AND INSTALLATION DETAILS AS PER MANUFACTURERS RECOMMENDATIONS

D826 — MUD VALVE V-703 — 100-D-712-DI

D840 — MUD VALVE V-704 — 100-D-714-DI

V-706 — SWIVEL JOINT — V-301 — V-306 — P-5 — D827

100-DS-304-DI — 100-DS-303-DI — D828

PRIMARY AEROBIC DIGESTER — SECONDARY AEROBIC DIGESTER

SEE DWG. NO. P-9 POLYMER INJECTION SYSTEM — 25-POLY-608/609-PVC — V-621 — DWG. NO. P-10 FROM EFFLUENT WATER DISTRIBUTION SYSTEM

SEE DWG. NO. P-10 FROM EFFLUENT WATER DISTRIBUTION SYSTEM — V-829 — V-813 — 25-POLY-610-PVC — 25-POLY-611-PVC — 25-POLY-612-PVC — 38-EW-803-PVC

38-EW-842-PVC — V-814 — V-623 — 38-EW-840-PVC — V-622 — V-624

DWG. NO. P-10 FROM EFFLUENT WATER DISTRIBUTION SYSTEM — 38-EW-842-PVC — V-833 — 38-EW-852-PVC (FLUSH LINE)

50X100 — V-334 — 100-DS-310-DI — 50X100 — V-332 — V-333 — 50-DS-328-DI

STATIC MIXER — CENTRIFUGE — HOSE-BIBB HB-006 — 75-TS-323-DI — 150-TS-313-DI-I+ET

V-314 — 100-DS-315-DI -I+ET — D829 — CENTRIFUGE BY-PASS LINE — V-313 — D834 — CENTRIFUGE BUILDING

100-TS-312-DI — V-322 — THICKENED SLUDGE COLLECTION TANK — 100-TS-314-DI — HP — V-320 — P-11 — V-319 — V-324

HP — V-317 — P-10 — V-318 — V-321 — V-323

HP — V-315 — P-9 — V-316 — V-331 — 100-TS-320-DI — V-329 — 100-TS-320-DI

V-328 — 100-DS-306-DI — 100-DS-308-DI — 100-DS-309-DI — D835 — V-708 — SWIVEL JOINT — 150-D-715-DI — B.F.

V-325 — 100-TS-324-DI -I+ET — V-326 — 100-TS-325-DI -I+ET — V-327 — 100-TS-326-DI -I+ET

V-309 — V-310 — V-311 — V-312 — P-6 — P-7 — V-307 — V-308

THICKENED SLUDGE — D833 — 100-TS-314-DI — 150-D-716-DI

DIGESTED SLUDGE STORAGE TANK

SLUDGE PUMP PIPEING:
100-TS-317-DI, P-9 INLET
100-TS-316-DI, P-9 DISCHARGE
100-TS-319-DI, P-10 INLET
100-TS-318-DI, P-10 DISCHARGE
100-TS-322-DI, P-11 INLET
100-TS-321-DI, P-11 DISCHARGE

HOSE-BIBB HB-010 — V-829 — 150-CE-720/731-DI CENTRATE — 150-TS-311/327-DI

CATCHBASIN IN CHEMICAL BUILDING — D848 — 200-D-740-PVC — 38-EW-802-PVC — DWG. NO. P-10 FROM EFFLUENT WATER DISTRIBUTION SYSTEM — 38-EW-803-PVC — 38-EW-842-PVC (FLUSH LINE) — 38-EW-804-PVC — DWG. NO. P-10 FROM EFFLUENT WATER DISTRIBUTION SYSTEM — 38-EW-841-PVC-I+ET

100-D-714-DI — 150-D-726-DI — 150-D-724-DI — 100-D-712-DI — M.H. 7 — 200-D-711-PVC — M.H. 6 — M.H. 1 — HOSE-BIBB HB-005

200-D-718-PVC — 200-D-727-PVC — 150-D-721-PVC — M.H. 2 — SEE DWG. # P-10 TO MH3 THEN PUMPING STATION — 200-D-728-PVC — CATCHBASIN CB-11

LOADING BAY

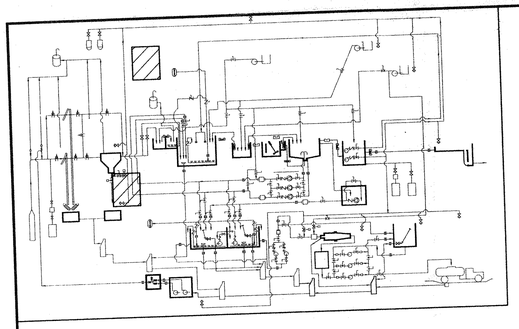

NOTE

THIS DRAWING DOES NOT REPRESENT AS-BUILT CONDITIONS.

No.	Date	Revision
3	OCTOBER/95	ISSUED FOR TENDER
2	SEPT 15/95	ISSUED FOR REVIEW
1	JAN 16/95	ISSUED FOR M.O.E.E. APPROVAL

McNEELY ENGINEERING CONSULTANTS LTD.

Owner	TOWNSHIP OF OSNABRUCK
Project	INGLESIDE SEWAGE TREATMENT PLANT O.C.W.A. SEWAGE WORKS PROJECT No. 40-0797
Title	PROCESS DIAGRAM V

Design	H.A.I.	Scale	NONE	Proj. No. M2544-4	Dwg No. P-8
Drawn	GMc	Check	H.A.I.	Date SEPT 15/95	

NOTES:

1. ALL PROCESS PIPING DIAGRAMS SHALL BE READ IN CONJUNCTION WITH INSTRUMENTATION DATA SHEETS. NIPPLES AND CONNECTION POINTS OF INSTRUMENTATION DEVICES AS CALLED FOR ON INSTRUMENTATION DATA SHEETS ARE NOT SHOWN ON PROCESS PIPING DIAGRAMS FOR CLARITY. CONTRACTOR SHALL CO-ORDINATE ALL SHOP DRAWING ACTIVITIES TO ENSURE THAT THE REQUIREMENTS OF INSTRUMENTATION AND CONTROL ARE REFLECTED ON PIPE SPOOLS.

2. SECTIONS OF DI PIPE RECEIVING A FLOW ELEMENT SHALL BE UNLINED. (LENGTH OF UNLINED SECTION TO BE CO-ORDINATED WITH LENGTH OF FLOW ELEMENT.)

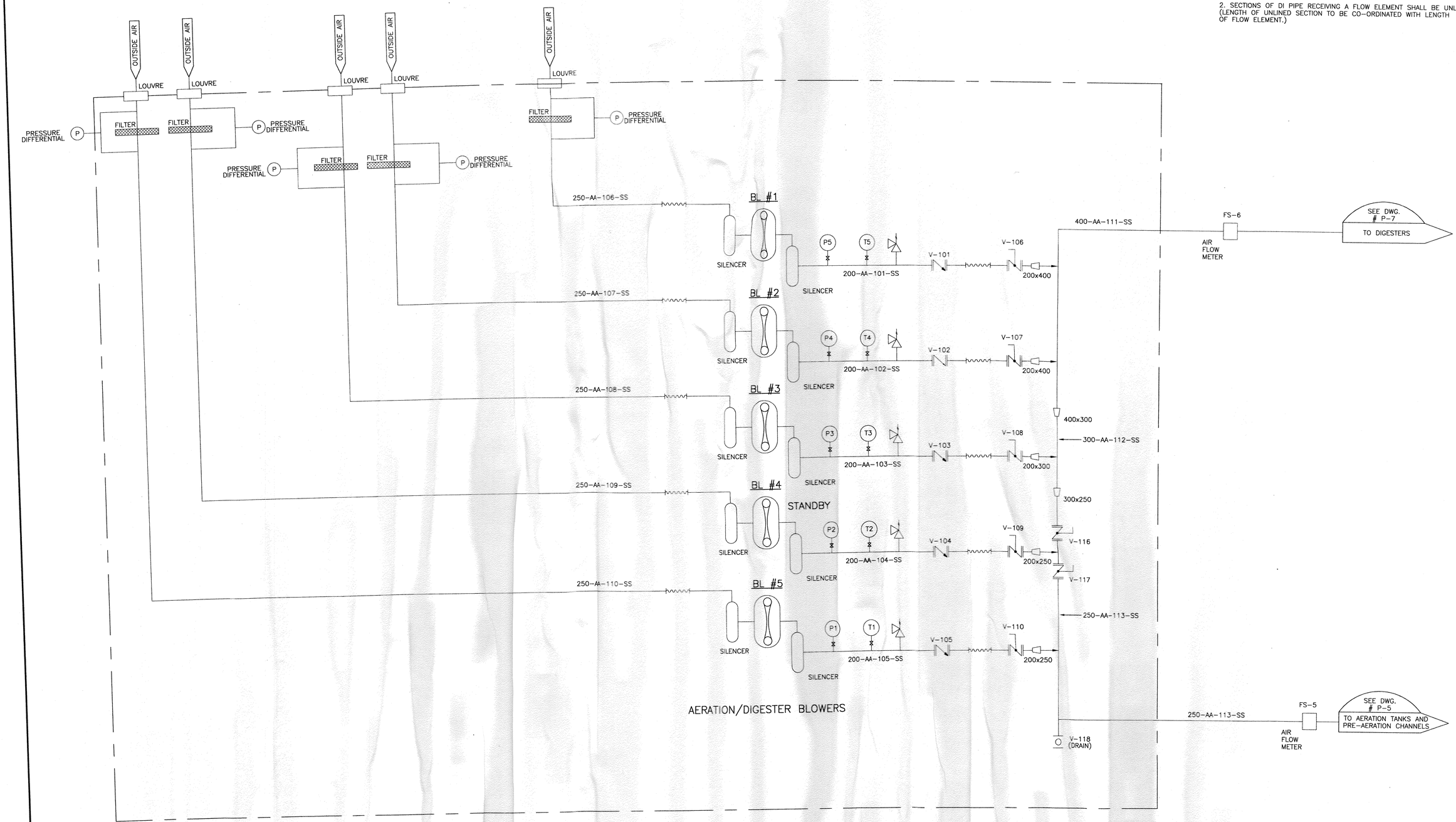

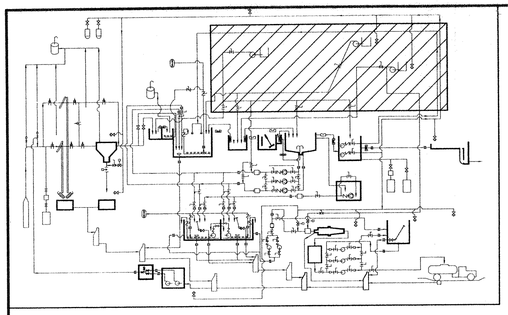

NOTES:

1. ALL PROCESS PIPING DIAGRAMS SHALL BE READ IN CONJUNCTION WITH INSTRUMENTATION DATA SHEETS. NIPPLES AND CONNECTION POINTS OF INSTRUMENTATION DEVICES AS CALLED FOR ON INSTRUMENTATION DATA SHEETS ARE NOT SHOWN ON PROCESS PIPING DIAGRAMS FOR CLARITY. CONTRACTOR SHALL CO-ORDINATE ALL SHOP DRAWING ACTIVITIES TO ENSURE THAT THE REQUIREMENTS OF INSTRUMENTATION AND CONTROL ARE REFLECTED ON PIPE SPOOLS.

2. SECTIONS OF DI PIPE RECEIVING A FLOW ELEMENT SHALL BE UNLINED. (LENGTH OF UNLINED SECTION TO BE CO-ORDINATED WITH LENGTH OF FLOW ELEMENT.)

NOTE

THIS DRAWING DOES NOT REPRESENT AS-BUILT CONDITIONS.

No.	Date	Revision
3	OCTOBER/95	ISSUED FOR TENDER
2	SEPT 15/95	ISSUED FOR REVIEW
1	JAN 16/95	ISSUED FOR M.O.E.E. APPROVAL

McNEELY ENGINEERING CONSULTANTS LTD.

Owner	TOWNSHIP OF OSNABRUCK
Project	INGLESIDE SEWAGE TREATMENT PLANT O.C.W.A. SEWAGE WORKS PROJECT No. 40-0797
Title	PROCESS DIAGRAM VI

Design	W.H.	Scale	AS SHOWN	Proj. No. M2544-4	Dwg No. P-9
Drawn	T.H.	Check	D.W.L.	Date SEPT 15/95	

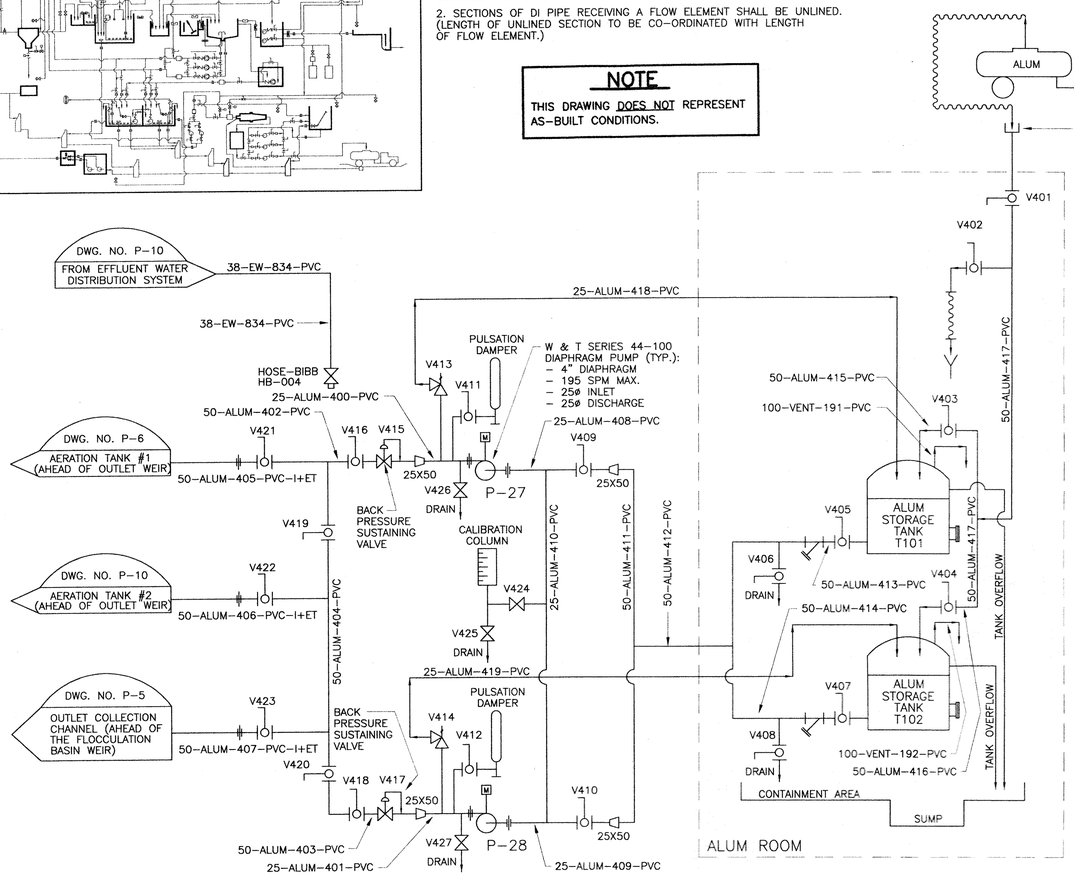

ALUM CHEMICAL INJECTION SYSTEM

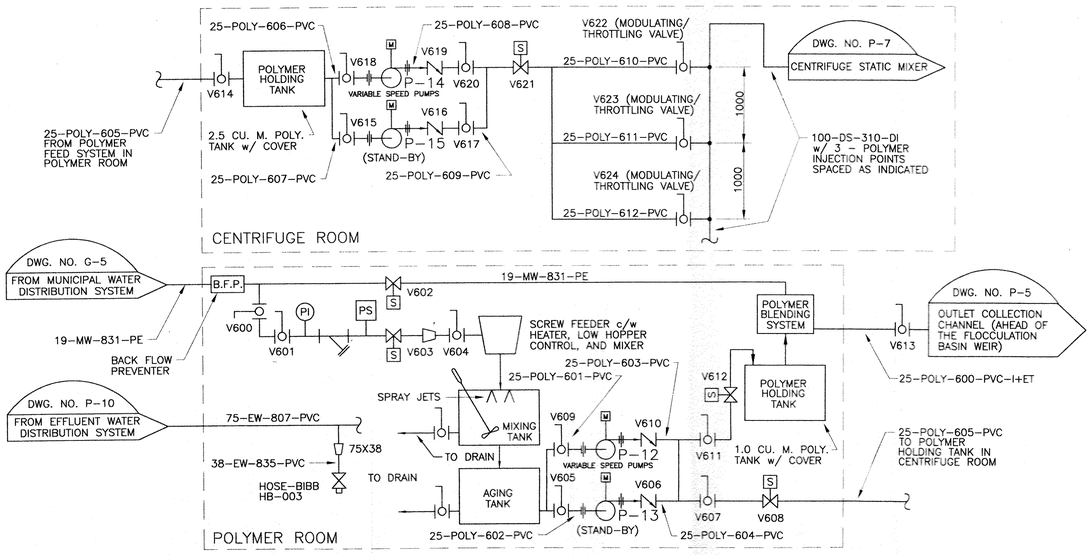

POLYMER CHEMICAL INJECTION SYSTEM

NOTE:
ALL ACCESSORIES SHALL BE WALLACE AND TIERNAN OR EQUAL.

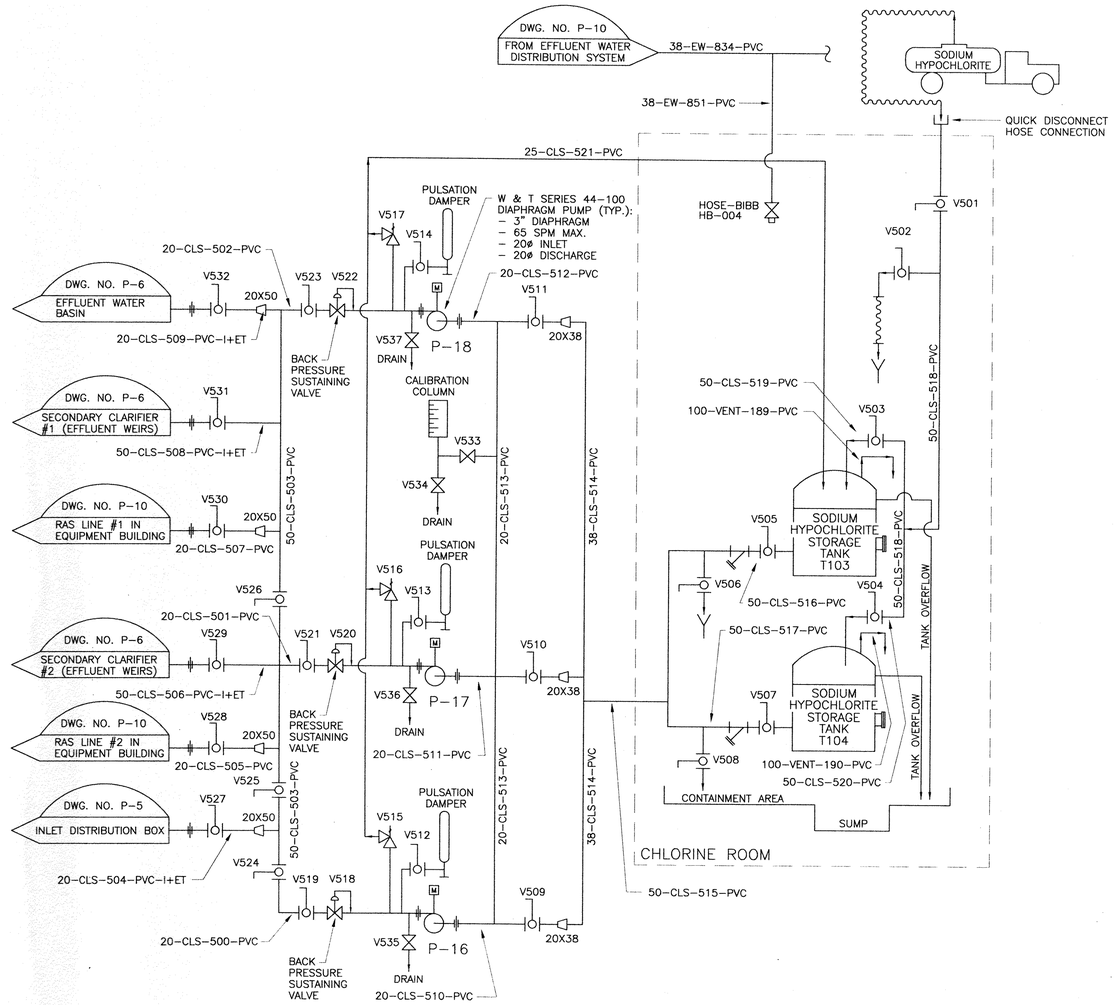

CHLORINE INJECTION SYSTEM

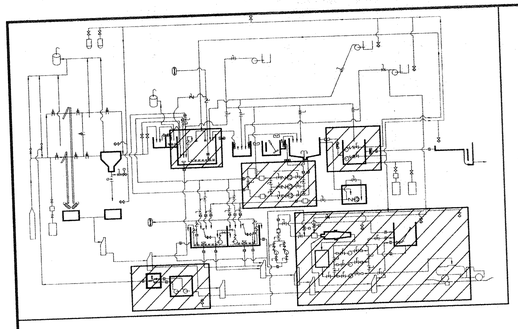

NOTE

THIS DRAWING DOES NOT REPRESENT AS-BUILT CONDITIONS.

NOTES:

1. ALL PROCESS PIPING DIAGRAMS SHALL BE READ IN CONJUNCTION WITH INSTRUMENTATION DATA SHEETS. NIPPLES AND CONNECTION POINTS OF INSTRUMENTATION DEVICES AS CALLED FOR ON INSTRUMENTATION DATA SHEETS ARE NOT SHOWN ON PROCESS PIPING DIAGRAMS FOR CLARITY. CONTRACTOR SHALL CO-ORDINATE ALL SHOP DRAWING ACTIVITIES TO ENSURE THAT THE REQUIREMENTS OF INSTRUMENTATION AND CONTROL ARE REFLECTED ON PIPE SPOOLS.

2. SECTIONS OF DI PIPE RECEIVING A FLOW ELEMENT SHALL BE UNLINED. (LENGTH OF UNLINED SECTION TO BE CO-ORDINATED WITH LENGTH OF FLOW ELEMENT.)

No.	Date	Revision
3	OCTOBER/95	ISSUED FOR TENDER
2	SEPT 15/95	ISSUED FOR REVIEW
1	JAN 16/95	ISSUED FOR M.O.E.E. APPROVAL

REGISTERED PROFESSIONAL ENGINEER — H.A. Ibrahim — Oct 6/95 — PROVINCE OF ONTARIO

REGISTERED PROFESSIONAL ENGINEER — D.W. Lishman — Oct 6/95 — PROVINCE OF ONTARIO

McNEELY ENGINEERING CONSULTANTS LTD.

Owner	TOWNSHIP OF OSNABRUCK				
Project	INGLESIDE SEWAGE TREATMENT PLANT O.C.W.A. SEWAGE WORKS PROJECT No. 40-0797				
Title	PROCESS DIAGRAM VII				
Design	H.A.I.	Scale	NONE	Proj. No.	M2544-4
Drawn	GMc	Check	H.A.I.	Date	SEPT 15/95
				Dwg No.	P-10

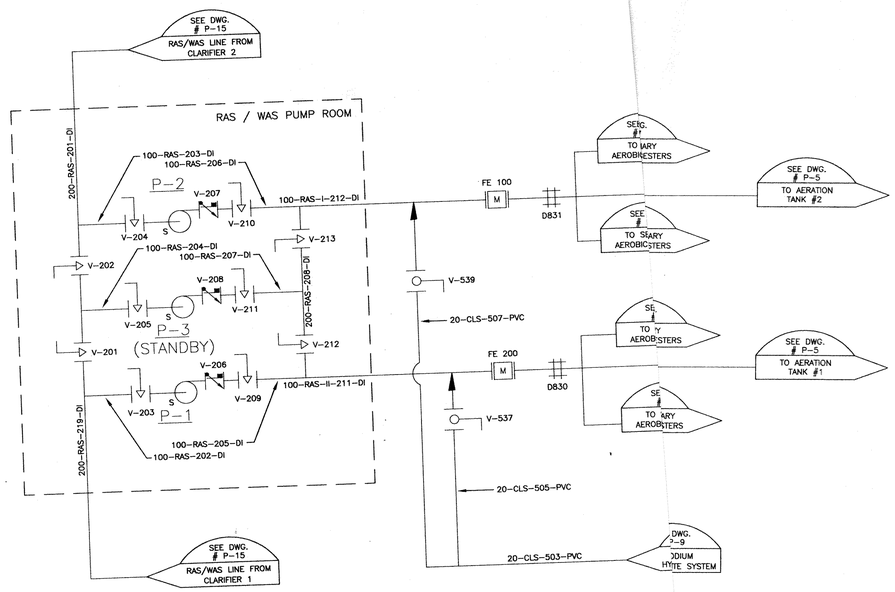

RAS/WAS PUMP ROOM

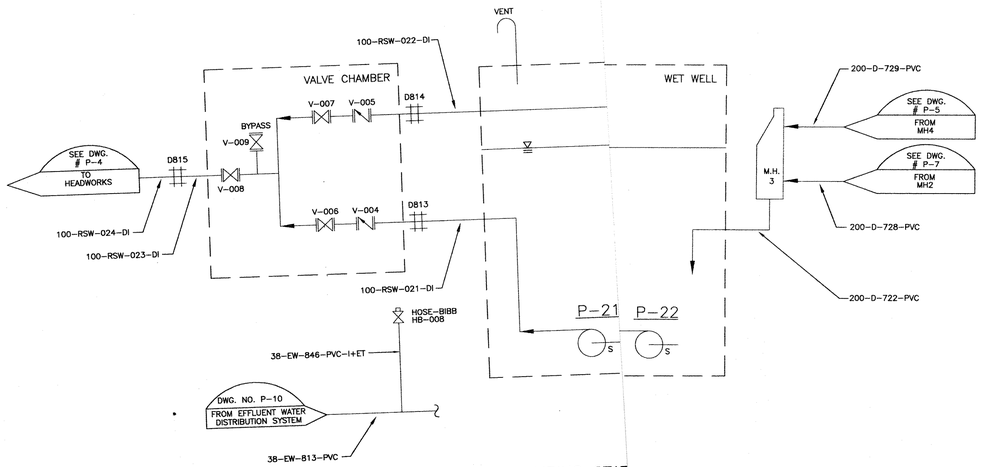

SUBMERSIBLE PUMPING STAT

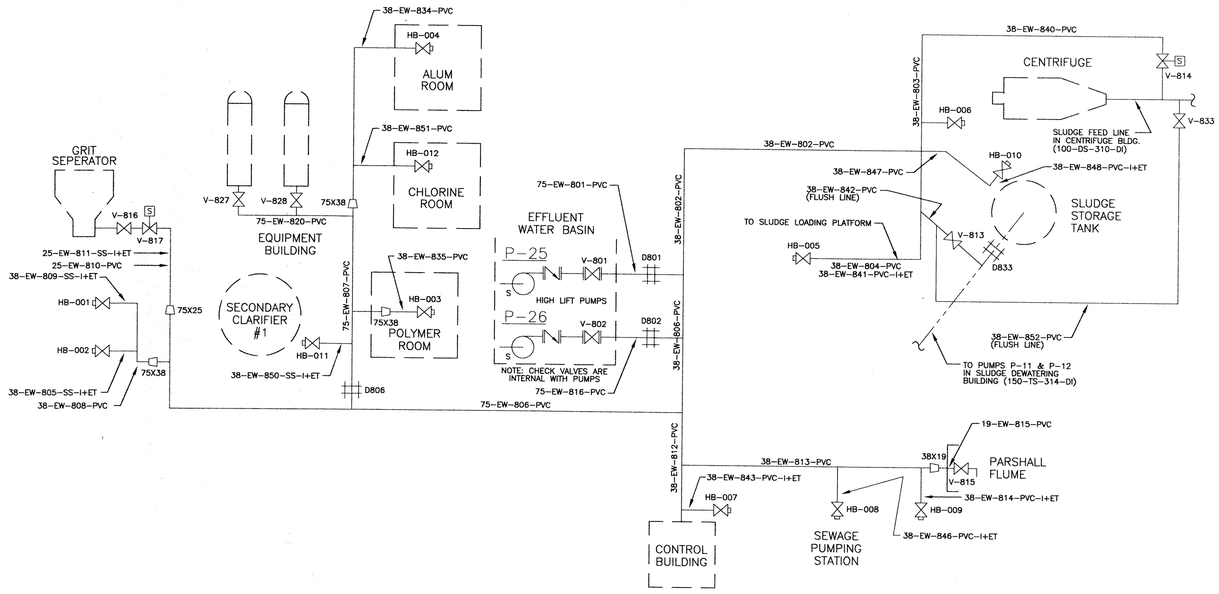

EFFLUENT WATER SCHEMATIC – HIGH PRESSURE

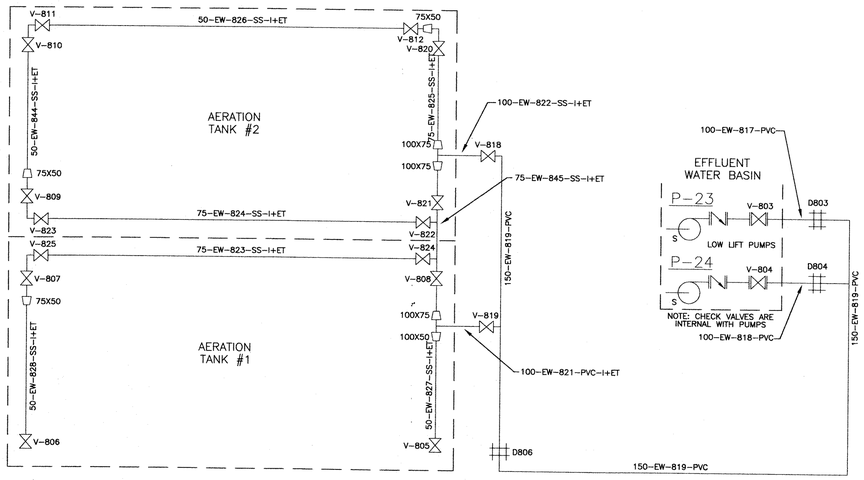

EFFLUENT WATER SCHEMATIC – LOW PRESSURE

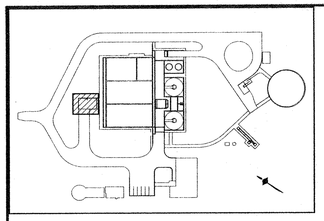

NOTE

THIS DRAWING DOES NOT REPRESENT AS-BUILT CONDITIONS.

0 .5 1m

No.	Date	Revision
3	OCTOBER/95	ISSUED FOR TENDER
2	SEPT 15/95	ISSUED FOR REVIEW
1	JAN. 16/95	ISSUED FOR M.O.E.E. APPROVAL

H. Thiel 96/95 — D. Hinchley DEC 6/95

McNEELY ENGINEERING CONSULTANTS LTD.

Owner	TOWNSHIP OF OSNABRUCK
Project	INGLESIDE SEWAGE TREATMENT PLANT O.C.W.A. SEWAGE WORKS PROJECT No. 40-0797
Title	HEADWORKS PLAN

Design	H.A.I.	Scale	AS SHOWN	Proj. No.	M2544-4	Dwg No.
Drawn	G.M.	Check	H.A.I.	Date	SEPT 15/95	PU-1

NOTES:

1. ALL CHANNEL COVERS TO BE REMOVABLE TO ALLOW ACCESS TO SLUICE GATES AND MANUAL SCREEN.
2. SEE STRUCTURAL DRAWINGS FOR HANDRAIL DETAILS.
3. SLG GATES 1, 3, 5, AND 7 ARE NORMALLY OPEN

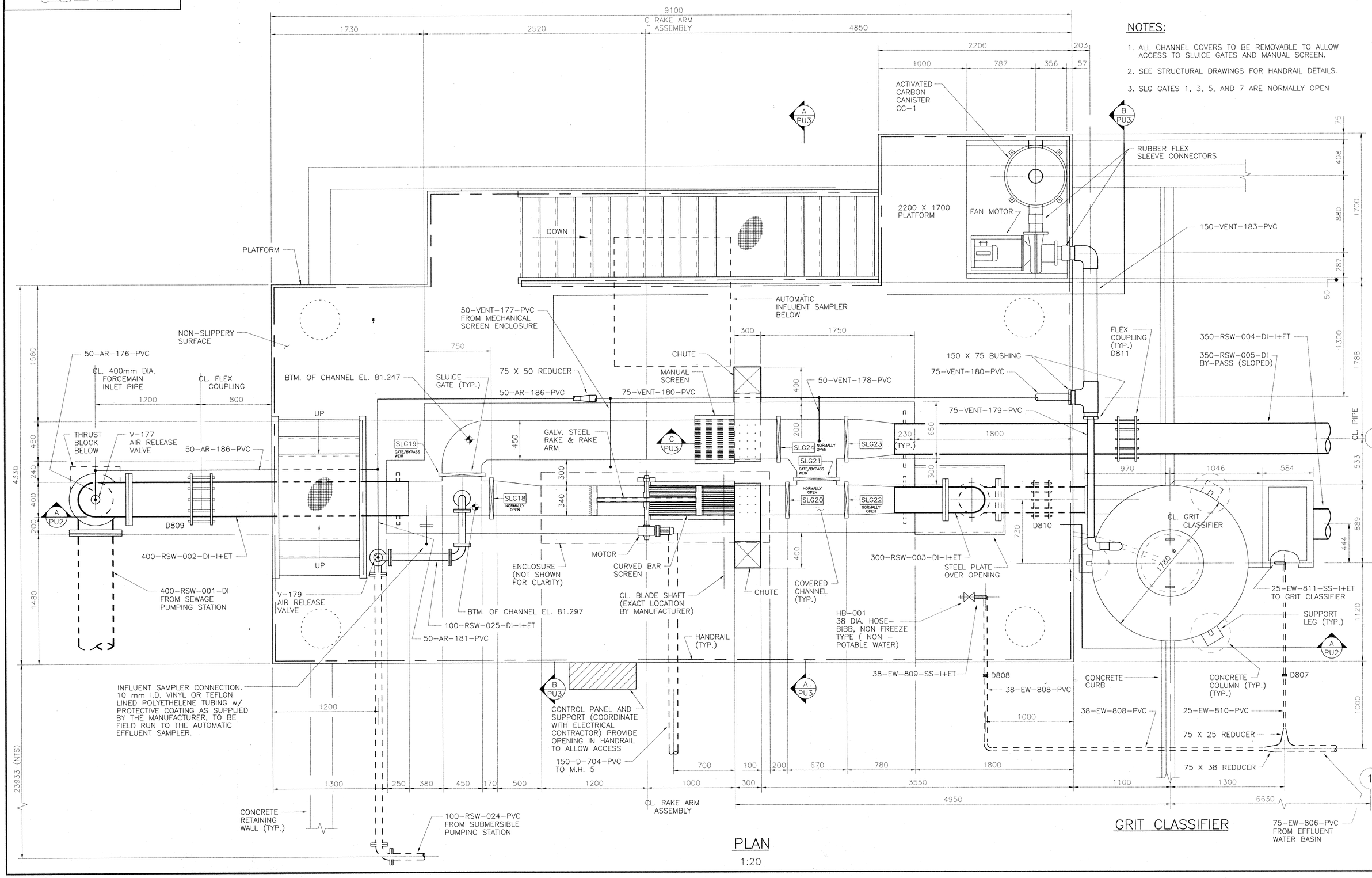

PLAN

1:20

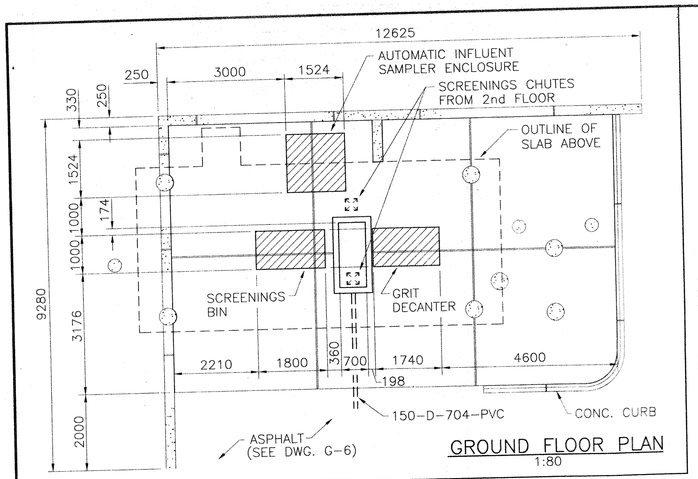

GROUND FLOOR PLAN
1:80

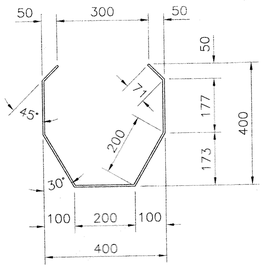

TROUGH SECTION
1:10

NOTE: ALL BENDS AND CORNERS FORMING TROUGH SHAPE MUST BE STIFFENED/REINFORCED TO ENSURE LASTING CONFIGURATION. FABRICATE FROM 6mm MIN. THICKNESS 5083-H321 ALUMINUM PLATE.

NOTE

THIS DRAWING DOES NOT REPRESENT AS-BUILT CONDITIONS.

No.	Date	Revision
3	OCTOBER/95	ISSUED FOR TENDER
2	SEPT 15/95	ISSUED FOR REVIEW
1	JAN. 16/95	ISSUED FOR M.O.E.E. APPROVAL

Oct 6/95

Oct 6/95

McNEELY ENGINEERING CONSULTANTS LTD.

Owner	TOWNSHIP OF OSNABRUCK
Project	INGLESIDE SEWAGE TREATMENT PLANT O.C.W.A. SEWAGE WORKS PROJECT No. 40-0797
Title	HEADWORKS SECTION

Design	H.A.I.	Scale	AS SHOWN	Proj. No. M2544-4	Dwg No. PU-2
Drawn	G.M.	Check	H.A.I.	Date SEPT 15/95	

0 .5 1m

38 DIA. HOSE-BIBB, NON FREEZE TYPE (NON - POTABLE WATER) HB001
BIRD SCREEN ON THREADED CAP
150-VENT-184-PVC
ACTIVATED CARBON CANISTER (ODOUR CONTROL) CC-1
150 X 75 BUSHING
PROVIDE 12 DIA. BALL VALVE TO ALLOW DRAINAGE OF CONDENSATION IN CARBON CANISTER, V-139
350-RSW-005-DI BY-PASS (SLOPED)
50-VENT-177-PVC
REMOVEABLE ENCLOSURE TOP
ENCLOSURE
ACCESS DOOR
DETAIL 2 PU3
DETAIL 3 PU3
HANDRAIL
BLADE MECHANISM
75-VENT-180-PVC
TOP OF SLIDE GATE/BYPASS WEIR 81.700
TOP OF SLIDE GATE/BYPASS WEIR 81.550
50-AR-181-PVC
V-179 AIR RELEASE VALVE
V-178
FLEX COUPLING (TYP.) D809
V-177 AIR RELEASE VALVE
50-AR-186-PVC
50-AR-176-PVC
V-176
EL. 81.497
MAX.-W.L. 81.675
MAX.-W.L. 81.525
81.297
81.247
R=1000
100
50
D811
75-VENT-179-PVC
PS-11
PS-11
75 X 50 REDUCER
75-VENT-180-PVC
HEAT TRACED & INSULATED
80.525
10 mm I.D. VINYL OR TEFLON LINED POLYETHELENE TUBING w/ PROTECTIVE COATING AS SUPPLIED BY THE MANUFACTURER, TO BE FIELD RUN TO THE AUTOMATIC EFFLUENT SAMPLER. LINE TO BE HEAT TRACED AND INSULATED. SEE DWG. PU-2 FOR LINE CONTINUATION.
300-RSW-003-DI-I+ET
PS-2
80.220
GRIT CLASSIFIER
380
80.144
79.838
1230
2050
TROUGH END CAP
79.766
38-EW-809-SS-I+ET
D810
V-816
350-RSW-004-DI-I+ET
SCREENINGS CHUTE AND TROUGH
WALK-IN ENCLOSURE FOR AUTOMATIC INFLUENT SAMPLER
400-RSW-002-DI-I+ET (INSULATE AND HEAT TRACE FOR 2000 mm BELOW GRADE)
V-817
50-RSW-028-DI-I+ET
50
50-RSW-029-DI-I+ET
V-013
SCREEN
TROUGH VIBRATOR
750 OVERFLOW HOSE H-1
QUICK DISCONNECT
V 011 NORMALLY OPEN
100-RSW-025-DI-I+ET (INSULATE AND HEAT TRACE FOR 2000 mm BELOW GRADE)
SCREENINGS BIN
V-010 (NORMALLY CLOSED)
QUICK DISCONNECT
GRIT DECANTER
1674
1300
1000
SLOPE FLOOR TO SUMP
DECANTER FLOOR STOP
76.800
CONCRETE RETAINING WALL (SEE STRUCTURAL DWGS.)
76.650
BIN FLOOR STOP
V-012 NORMALLY CLOSED
50ø HOSE H-3
575
38-EW-805-SS-I+ET (INSULATE AND HEAT TRACE FOR 2000 mm BELOW GRADE)
50ø HOSE H-2
38 DIA. HOSE-BIBB, NON FREEZE TYPE (NON - POTABLE WATER) HB-002
200
500 MIN.
150
700
SEE STRUCTURAL DWG. SO2 FOR FLOOR SUMP DETAILS
7150
2279
25-EW-811-SS-I+ET (INSULATE AND HEAT TRACE FOR 2000 mm BELOW GRADE)
400-RSW-001-DI
THRUST BLOCK
74.400
74.750
100-RSW-024-PVC
25-EW-810-PVC
2525
450
425

SECTION A PU2
1:20

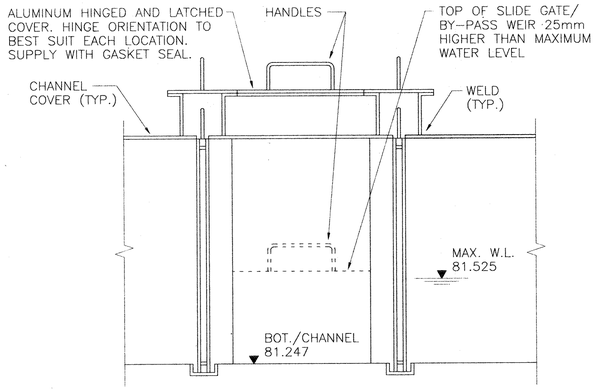

DETAIL 3 PU3 — 1:10 — SLIDE GATE / BYPASS WEIR

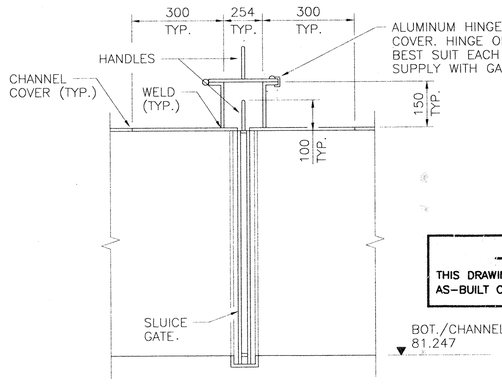

DETAIL 2 PU3 — 1:10 — SLIDE GATE COVER

NOTE

THIS DRAWING DOES NOT REPRESENT AS-BUILT CONDITIONS.

No.	Date	Revision
3	OCTOBER/95	ISSUED FOR TENDER
2	SEPT 15/95	ISSUED FOR REVIEW
1	JAN. 16/95	ISSUED FOR M.O.E.E. APPROVAL

McNEELY ENGINEERING CONSULTANTS LTD.

Owner	TOWNSHIP OF OSNABRUCK
Project	INGLESIDE SEWAGE TREATMENT PLANT O.C.W.A. SEWAGE WORKS PROJECT No. 40-0797
Title	HEADWORKS SECTIONS & DETAILS

Design	H.A.I.	Scale	AS SHOWN	Proj. No.	M2544-4
Drawn	G.M.	Check	H.A.I.	Date	SEPT 15/95

Dwg No. PU-3

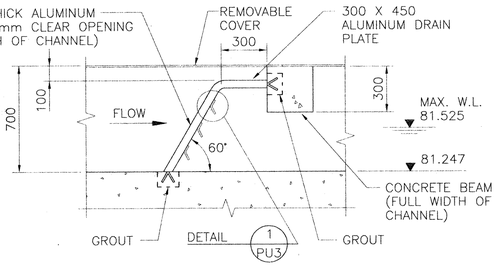

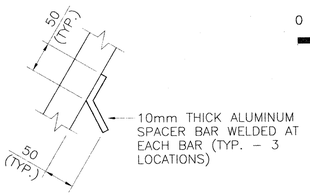

DETAIL 1 PU3 — 1:5

0 .5 1m

SECTION C PU3 — 1:20 — MANUAL SCREEN

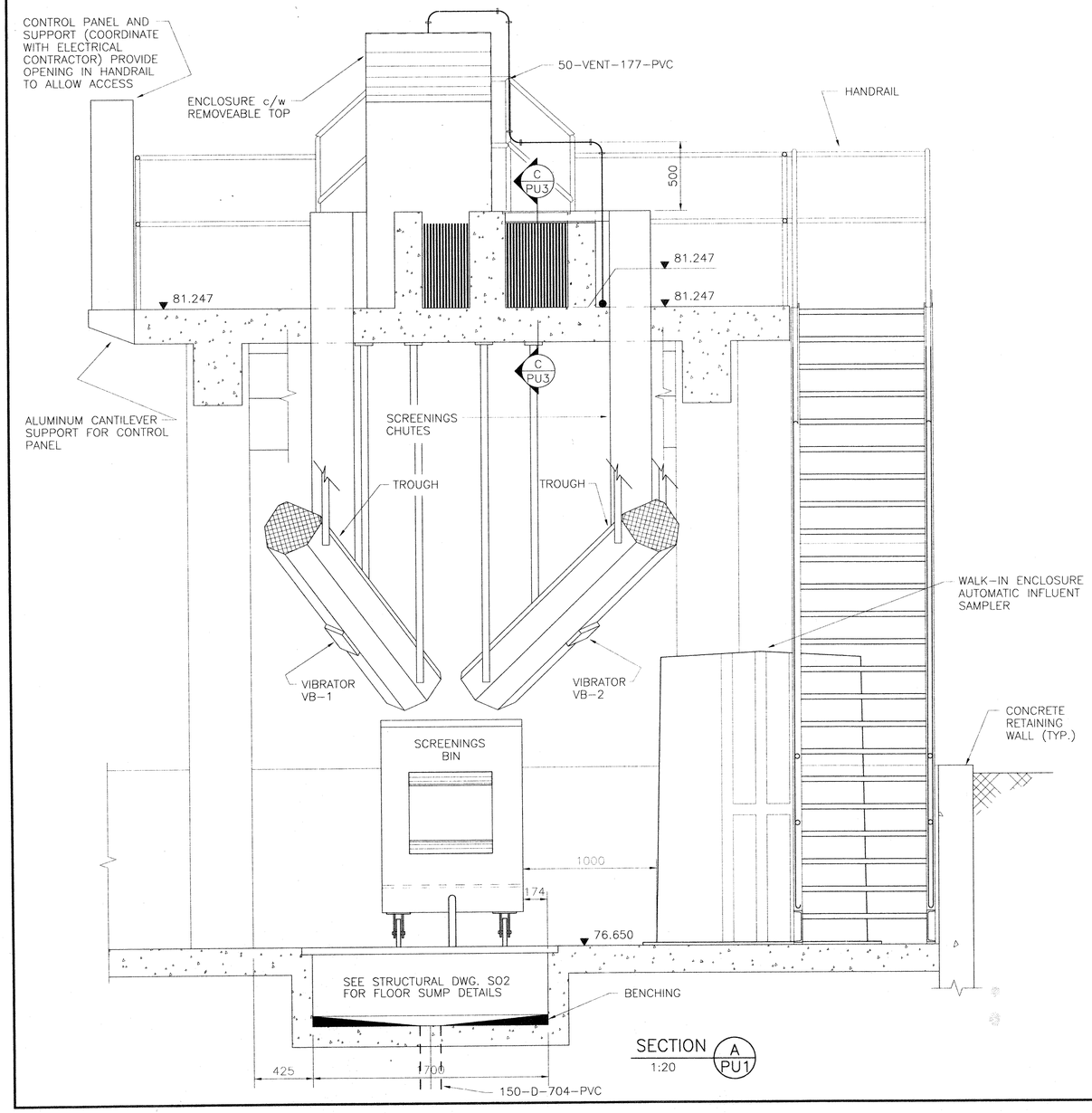

SECTION A PU1 — 1:20

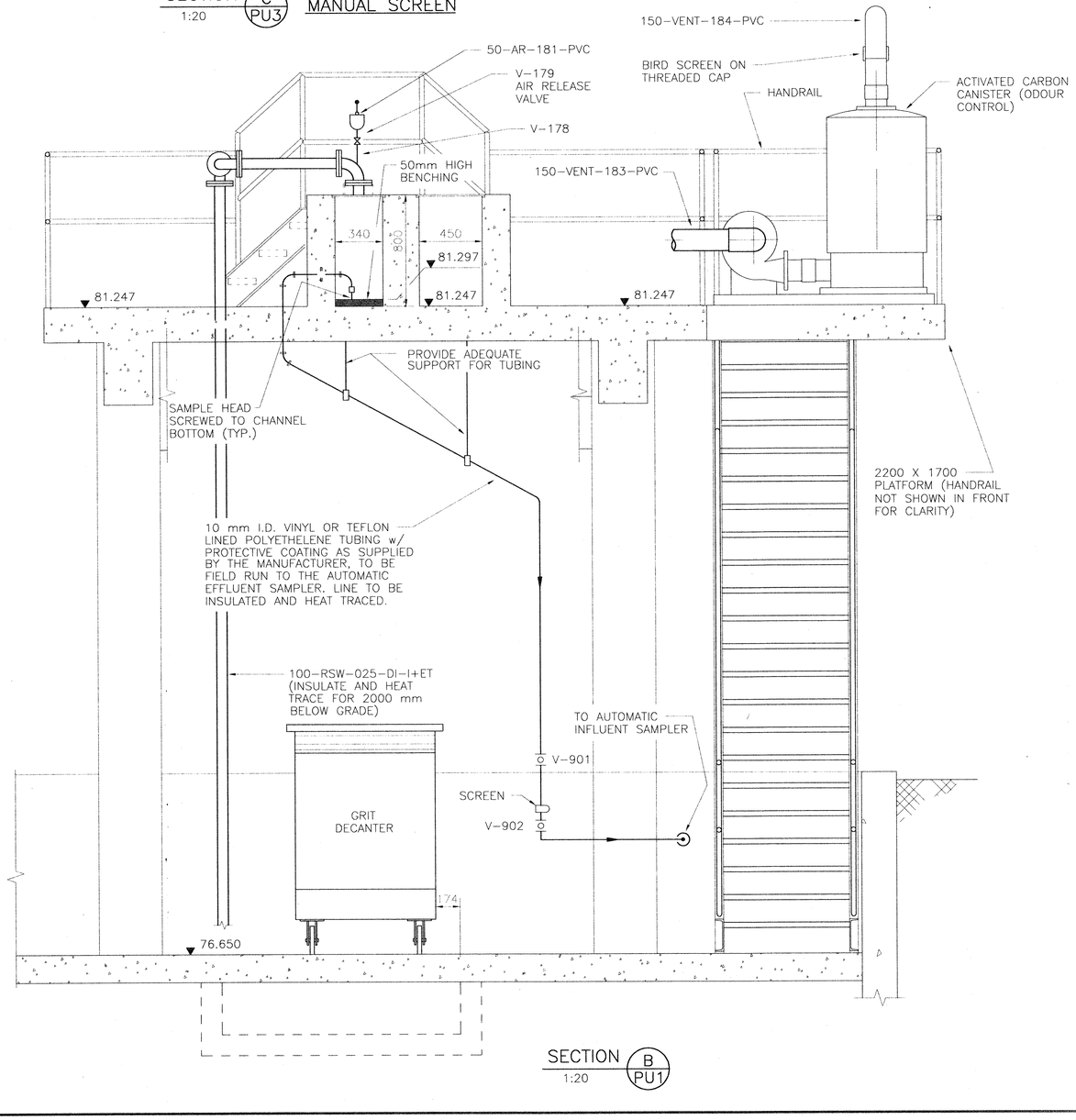

SECTION B PU1 — 1:20

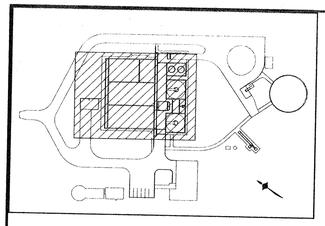

NOTE
THIS DRAWING DOES NOT REPRESENT AS-BUILT CONDITIONS.

0 2 4m

No.	Date	Revision
3	OCTOBER/95	ISSUED FOR TENDER
2	SEPT 15/95	ISSUED FOR REVIEW
1	JAN. 16/95	ISSUED FOR M.O.E.E. APPROVAL

REGISTERED PROFESSIONAL ENGINEER H.A. Ibrahim 01/16/95 PROVINCE OF ONTARIO

REGISTERED PROFESSIONAL ENGINEER D.W. Lishman 95/01/16 PROVINCE OF ONTARIO

McNEELY ENGINEERING CONSULTANTS LTD.

Owner	TOWNSHIP OF OSNABRUCK
Project	INGLESIDE SEWAGE TREATMENT PLANT O.C.W.A. SEWAGE WORKS PROJECT No. 40-0797
Title	AERATION TANKS AND DIGESTERS PLAN AND SECTIONS

Design	H.A.I.	Scale	AS SHOWN	Proj. No. M2544-4	Dwg No. PU-4
Drawn	T.H.	Check	H.A.I.	Date SEPT 15/95	

M.H. 7
EDGE OF ASPHALT
100-D-714-DI (SLOPE 0.7% TO MH 7)
150-D-726-DI (SLOPE 0.52% TO MH 7)
50-D-741-PVC (FORCEMAIN)
100-D-712-DI (SLOPE 0.7% TO MH 7)
150-D-724-DI (SLOPE 0.52% TO MH 7)
75-SCUM-387-DI-I+ET (SLOPE MIN. 0.7% INTO TANK)
100-WAS-253-DI-I+ET (SLOPE MIN. 0.7% INTO TANK)
100-WAS-251-DI-I+ET (SLOPE MIN. 0.7% INTO TANK)
75-SCUM-388-DI-I+ET (SLOPE MIN. OF 0.7% INTO TANK)
100-WAS-254-DI-I+ET (STANDBY) (SLOPE MIN. OF 0.7% INTO TANK)
100-WAS-252-DI-I+ET (STANDBY) (SLOPE MIN. OF 0.7% INTO TANK)
200-D-711-PVC
TO M.H. 6
200-D-717-PVC (SLOPE MINIMUM 0.4%)
100-DS-306-DI (SLOPE MINIMUM 0.7%)
50-D-740-PVC (FORCEMAIN)
TO CENTRIFUGE
25-POLY-605-PVC (PIPE RUNS 150mm DIRECTLY ABOVE PIPE 100-DS-306-DI. SHOWN OFFSET FOR CLARITY)
CHEMICAL LOADING BAY
MAGNETIC FLOWMETER CHAMBER
CATWALK
150-D-723-DI
100-DS-303-DI
100-DS-301-DI
150-D-725-DI
100-DS-304-DI
100-DS-302-DI
150-RAS-I-211-DI (SLOPE MINIMUM 0.52%)
150-RAS-II-212-DI (SLOPE MINIMUM 0.52%)
0.16% SLOPE TO DRAIN
PRIMARY AEROBIC DIGESTER
MUD VALVE V-703
MUD VALVE V-704
SECONDARY AEROBIC DIGESTER
0.2% SLOPE TO DRAIN
CHECKER PLATE COVERED CHANNEL FOR FUTURE EXPANSION
KNOCK OUT WALL FOR FUTURE EXPANSION
250-RSW-010-DI
400-AA-111-SS
HEADWORKS / PRE-AERATION PIPING
(A) 350-RSW-005-DI-I+ET
(B) 150-RAS-II-212-DI (SLOPE MIN. 0.52%)
(C) 350-RSW-004-DI-I+ET
(D) 350-RSW-008-DI (SLOPE MIN. 0.17%)
(E) 350-RSW-007-DI (SLOPE MIN. 0.17%)
(F) 350-RSW-006-DI (SLOPE MIN. 0.17%)
(G) 150-RAS-I-211-DI (SLOPE MIN. 0.52%)
CC-1 ACTIVATED CARBON CANISTER c/w SUPPORT - ACCESS PLATFORM
CATWALK
SLG#6
SLG#8 (SCUM)
SLG/RW #4
OUTLET COLLECTION CHANNEL #2
CONCRETE BAFFLE (TYP.)
MUD VALVE
SLG#12
(SCUM) SLG#11
AERATION TANK #2
SLG/RW #2
SLG/RW #1
100-AA-121-SS
150-AA-119-SS
200-AA-117-SS
CONTROL PANEL
HEADWORKS
INLET DISTRIBUTION BOX
CATWALK
100-AA-120-SS
150-AA-118-SS
200-AA-116-SS
FLOCCULATION BASIN
MIXED-LIQUOR DISTRIBUTION CHANNEL
OUTLET COLLECTION CHANNEL #1
AERATION TANK #1
MUD VALVE
250-AA-113-SS
EQUIP. BUILDING
SCUM CHAMBER
SLG#15 (SCUM)
SLG/RW #16
SLG/RW #3
SECONDARY CLARIFIER #2
SECONDARY CLARIFIER #1
TROUGH
CONTROL PANEL
EFFLUENT WATER BASIN
SLG/RW #17
38-EW-802-PVC TO CENTRIFUGE BLDG.
EFFLUENT WATER PIPING
(H) 75-EW-801-PVC
(J) 100-EW-817-PVC
(K) 100-EW-818-PVC
(L) 75-EW-816-PVC
400-EW-832-PVC TO PARSHALL FLUME
38-EW-808-PVC
25-EW-810-PVC
CC-2 ACTIVATED CARBON CANISTER c/w SUPPORT - ACCESS PLATFORM
100-RSW-024-DI
150-D-704-PVC
75-EW-806-PVC
PRE-AERATION CHANNEL #2
PRE-AERATION CHANNEL #1
CL. GRIT CLASSIFIER
PAVED ASPHALT PATH (TYP.)
250-RSW-009-DI
75-EW-807-PVC
100-D-710-PVC
75-D-706-PVC
150-EW-819-PVC
75-D-707-PVC
4000X4000 LOADING PIT
RAMP TO PATH
150-D-705-PVC
200-D-729-PVC
150-EW-819-PVC
TO M.H. 3
M.H. 5
M.H. 4
75-EW-806-PVC
100-RSW-024-DI
WALK TO ROAD
PATH
ROAD
CONCRETE CURB
CL. CLARIFIER
FROM SUBMERSIBLE PUMPING STATION
38-EW-812-PVC TO CONTROL BUILDING
150-EW-819-PVC
75-EW-806-PVC
3300 2280 150 225
9000 6630 1500
1950 5750 6100 6100 2800 1000
14800 19600 9800 29800 (TYP.) 12200 9000 5500

PLAN
1:150

NOTE: EFFLUENT WATER SPRAY HEADER NOT SHOWN ON THIS DRAWING FOR CLARITY. SEE DRAWINGS PU-7, PU-9, AND PU-13 FOR DETAILS

NOTES:

1. FOR PRE-AERATION AND AERATION TANK PIPING SEE DWG. NO. PU-5, PU-6, AND PU-7
2. FOR EFFLUENT WATER PIPING SEE DWG. NO. PU-13
3. FOR DIGESTER TANK PIPING SEE DWG. NO. PU-8 AND PU-9
4. FOR CATWALK DETAILS SEE STRUCTURAL DRAWINGS
5. REFER TO MANUFACTURERS RECOMMENDATIONS FOR SUBMERGED AIR PIPING DIFFUSERS, LAYOUT, AND INSTALLATION DETAILS.
6. WHERE UNDERGROUND PIPING IDENTIFICATION DOES NOT INDICATE INSULATION AND HEAT TRACING (I+ET), IT MUST BE BURIED DEEPER THAN THE FROST LINE.

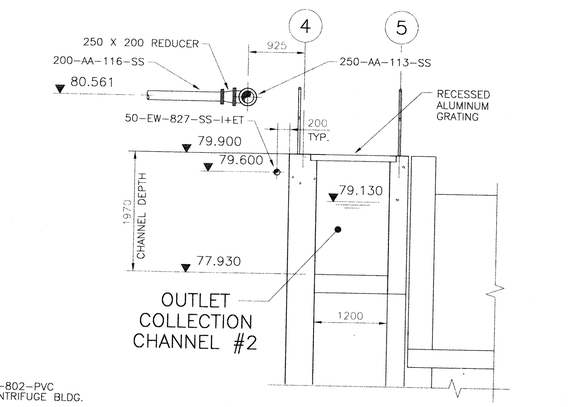

SECTION D / PU4
1:50

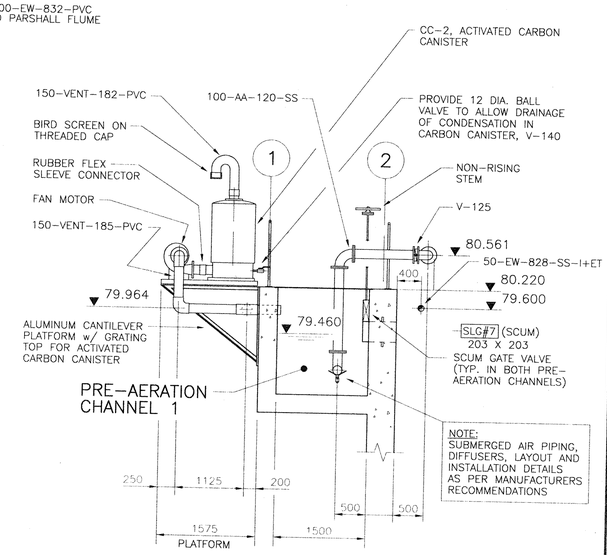

SECTION C / PU4
1:50

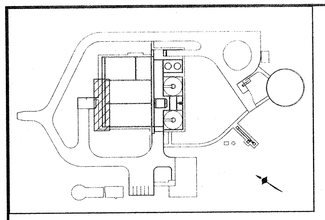

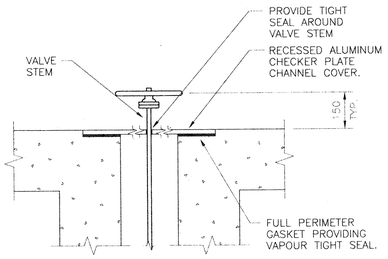

DETAIL 1 / PU-5
1:20

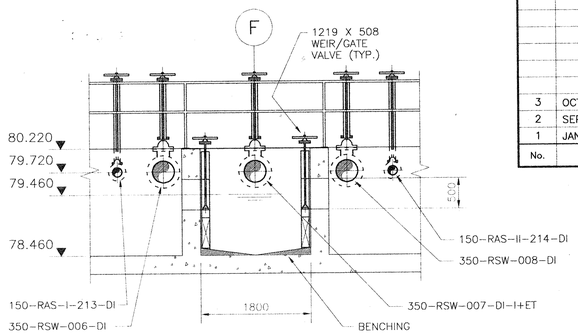

SECTION B / PU5
1:50

No.	Date	Revision
3	OCTOBER/95	ISSUED FOR TENDER
2	SEPT 15/95	ISSUED FOR REVIEW
1	JAN. 16/95	ISSUED FOR M.O.E.E. APPROVAL

McNEELY ENGINEERING CONSULTANTS LTD.

Owner: TOWNSHIP OF OSNABRUCK

Project: INGLESIDE SEWAGE TREATMENT PLANT
O.C.W.A. SEWAGE WORKS PROJECT No. 40-0797

Title: INLET BOX / PRE-AERATION CHANNELS
PLAN

Design	H.A.I.	Scale	AS SHOWN	Proj. No.	M2544-4	Dwg No.
Drawn	T.H.	Check	H.A.I.	Date	SEPT 15/95	PU-5

NOTE
THIS DRAWING DOES NOT REPRESENT AS-BUILT CONDITIONS.

0 1 2m

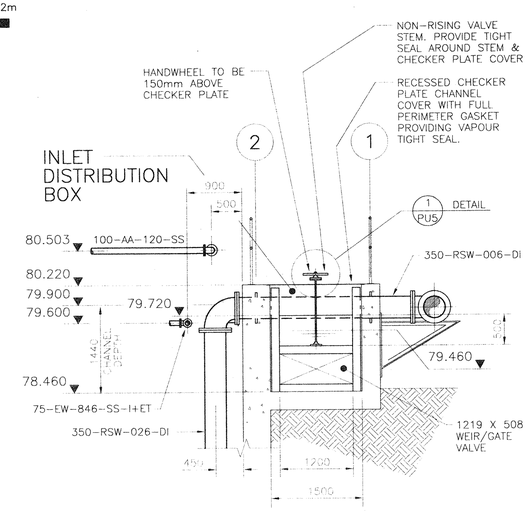

SECTION C / PU5
1:50

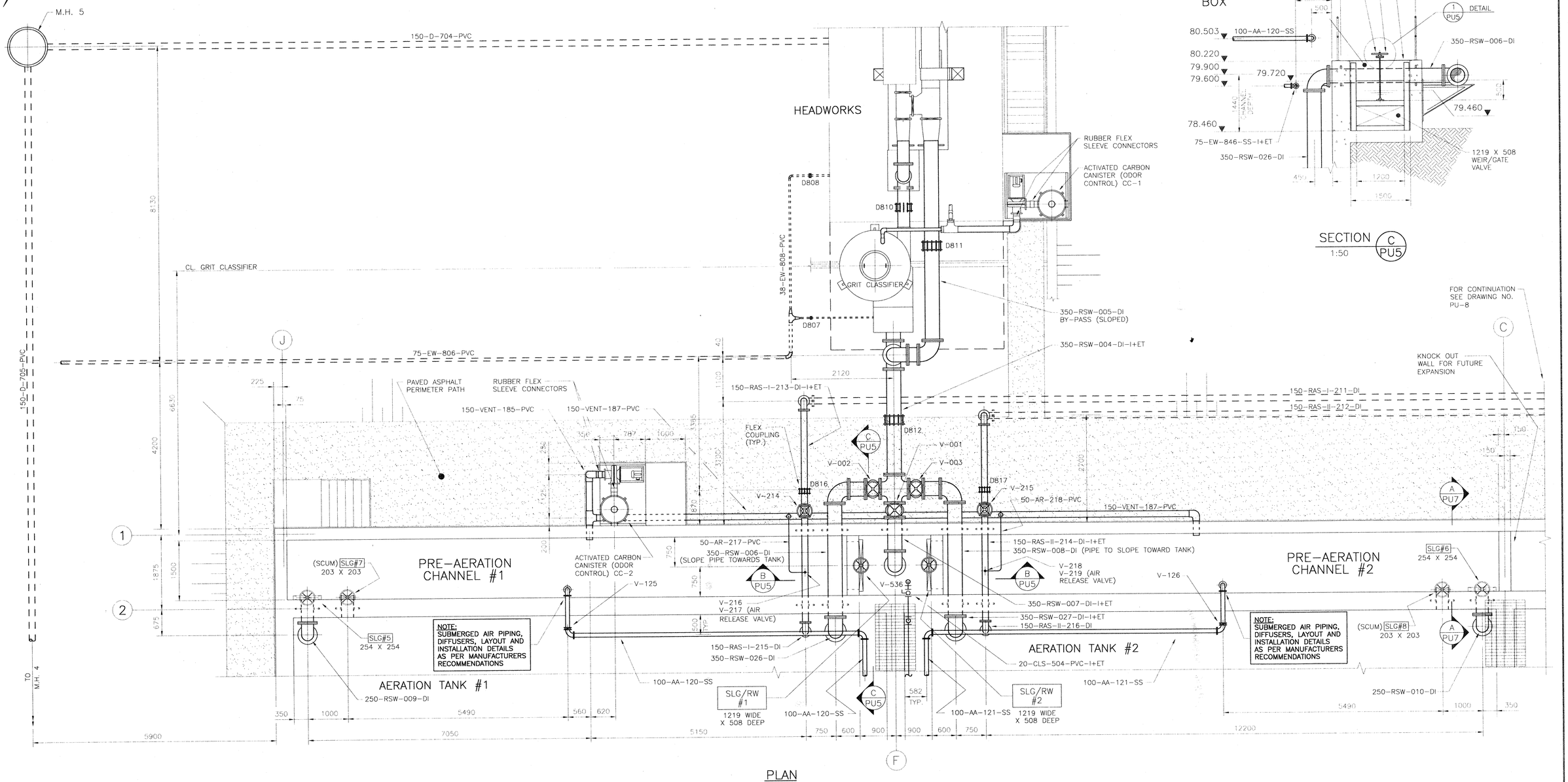

PLAN
1:50

NOTES: -CHECKERPLATE COVER OVER CHANNEL NOT SHOWN FOR CLARITY
-EFFLUENT WATER SPRAY HEADER NOT SHOWN ON THIS DRAWING FOR CLARITY. SEE DRAWINGS PU-7, PU-9, & PU-13 FOR DETAILS

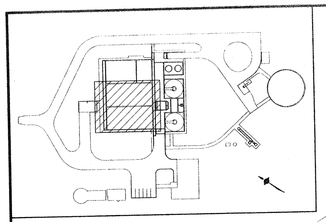

NOTE

THIS DRAWING DOES NOT REPRESENT AS-BUILT CONDITIONS.

0 1 2m

No.	Date	Revision
3	OCTOBER/95	ISSUED FOR TENDER
2	SEPT 15/95	ISSUED FOR REVIEW
1	JAN. 16/95	ISSUED FOR M.O.E.E. APPROVAL

McNEELY ENGINEERING CONSULTANTS LTD.

Owner: TOWNSHIP OF OSNABRUCK

Project: INGLESIDE SEWAGE TREATMENT PLANT
O.C.W.A. SEWAGE WORKS PROJECT No. 40-0797

Title: AERATION TANKS
PLAN

Design	H.A.I.	Scale	AS SHOWN	Proj. No.	M2544-4	Dwg No.
Drawn	T.H.	Check	H.A.I.	Date	SEPT 15/95	PU-6

PRIMARY AEROBIC DIGESTER

SECONDARY AEROBIC DIGESTER

KNOCK OUT WALL FOR FUTURE EXPANSION

CATWALK

250-RSW-010-DI

SLG#6 254 X 254

SLG#8 (SCUM) 203 X 203

V-126

PRE-AERATION CHANNEL #2

150-VENT-187-PVC

150-RAS-II-214-DI

350-RSW-008-DI (PIPE TO SLOPE TOWARD TANK)

350-RSW-007-DI-I+ET

13600 (TYP. BOTH PRE-AERATION CHANNELS)

0.16% SLOPE TO DRAIN

7450

150-RAS-II-216-DI

100-AA-121-SS

20-CLS-504-PVC-I+ET

350-RSW-027-DI

1219 WIDE X 508 DEEP SLG/RW #2

INSERT-ON FLOW METER CONNECTION 38-AA-130-SS

100-AA-125-SS (VERTICAL DROP LEG) V-124 ON DROP LEG

V-131

V-536

INLET DISTRIBUTION BOX

1219 WIDE X 508 DEEP SLG/RW #1

V-130

150 X 100 REDUCER

100-AA-124-SS (VERTICAL DROP LEG) V-123 ON DROP LEG

INSERT-ON FLOW METER CONNECTION 38-AA-129-SS

150-AA-118-SS

150 X 150 X 100 REDUCING TEE

INSERT-ON FLOW METER CONNECTION (ON VERTICAL DROP LEG) 38-AA-133-SS & V-134

150-RAS-I-215-DI

350-RSW-026-DI

150-VENT-187-PVC

150-RAS-I-213-DI

350-RSW-006-DI (SLOPE PIPE TOWARDS TANK)

4993

100-AA-120-SS

300 750 750 450 500

PRE-AERATION CHANNEL #1

0.16% SLOPE TO DRAIN

ACTIVATED CARBON CANISTER (ODOR CONTROL) CC-2

V-125

1000 787 356

250 1125 200

150-VENT-182-PVC

SLG#7 (SCUM) 203 X 203

SLG#5 254 X 254

1000

350

1500 TYP.

450 TYP. 450 TYP.

250-RSW-009-DI

1500 TYP.

250 THICK CONCRETE BAFFLES. (3) TYPICAL PER TANK

AERATION TANK #2

NOTE: SUBMERGED AIR PIPING, DIFFUSERS, LAYOUT AND INSTALLATION DETAILS AS PER MANUFACTURERS RECOMMENDATIONS

14800 (N.T.S.)

AERATION TANK #1

NOTE: SUBMERGED AIR PIPING, DIFFUSERS, LAYOUT AND INSTALLATION DETAILS AS PER MANUFACTURERS RECOMMENDATIONS

14800 (N.T.S.)

29800 (TYP. BOTH PRE-AERATION CHANNELS)

50-CLS-XXX-DI

100-AA-123-SS (VERTICAL DROP LEG) V-122 ON DROP LEG

200 X 150 REDUCER

100-AA-122-SS (VERTICAL DROP LEG) V-121 ON DROP LEG

200 X 200 X 100 REDUCING TEE

INSERT-ON FLOW METER CONNECTION (ON VERTICAL DROP LEG) 38-AA-131-SS & V-132

INSERT-ON FLOW METER CONNECTION (ON VERTICAL DROP LEG) 38-AA-132-SS & V-133

200 X 200 X 100 REDUCING TEE

INSERT-ON FLOW METER CONNECTION 38-AA-128-SS

V-129

V-128

INSERT-ON FLOW METER CONNECTION 38-AA-127-SS

250 X 200 REDUCER (TYP.)

V-127

OUTLET COLLECTION CHANNEL #2

INSERT-ON FLOW METER CONNECTION, 38-AA-126-SS

100-EW-821-SS (FOR CONTINUATION SEE PU-13)

SEE DRAWING PU-22 FOR TYP. STEP OVER PIPE DETAIL. STEP NOT SHOWN IN THIS VIEW FOR CLARITY.

SLG/RW #4 1219 WIDE X 508 DEEP

OUTLET COLLECTION CHANNEL #2

SEE DRAWING PU-17 FOR 50-ALUM-407-PVC-I+ET PIPE CONTINUATION.

SEE DRAWING PU-15 FOR 25-POLY-600-PVC-I+ET PIPE CONTINUATION.

THE MUD VALVE IS LOCATED ON CL. OF AERATION TANK. SHOWN HERE FOR ILLUSTRATION PURPOSES ONLY.

100-D-709-DI (ON VERTICAL)

V-702

100-D-710-DI

7430 (N.T.S.)

SEE DRAWING PU-12 FOR 300-AS-019-DI PIPE CONTINUATION.

SEE DRAWING PU-17 FOR 20-CLS-503-PVC PIPE CONTINUATION.

SLG#12 305 X 305

100-EW-822-SS (FOR CONTINUATION SEE DWG. PU-13)

RAISED ROOF

SEE DRAWING PU-22 FOR TYP. STEP OVER PIPE DETAIL. STEP NOT SHOWN IN THIS VIEW FOR CLARITY.

20-CLS-504-PVC-I+ET

25-POLY-600-PVC-I+ET

FULL WIDTH PLATE SLIDE OUT GATE, NORMALLY OPEN SEE SECTION F ON DWG. PU-12

50-ALUM-407-PVC-I+ET

200-AA-117-SS

200-AA-116-SS

NOTE: VALVE HANDLE TO BE BELOW GRATING. PROVIDE REMOVEABLE GRATING SECTION TO ALLOW ACCESS TO OPERATOR (2-PLACES)

NOTE: SLIDE OUT GATE NORMALLY REMOVED (OPEN). GATE HANDLE WHEN IN PLACE, TO BE BELOW REMOVEABLE CATWALK GRATING. GRATING MUST BE REMOVEABLE TO ALLOW ACCESS TO SLIDE OUT GATE.

100-EW-821-SS (FOR CONTINUATION SEE DWG. PU-15)

SLG#11 305 X 305

RAISED ROOF

38-EW-850-PVC-I+ET

HB-011, 38 DIA. HOSE BIBB (NON-POTABLE WATER) SEE DRAWING PU-7 FOR CONTINUATION.

SEE DRAWING PU-22 FOR TYP. STEP OVER PIPE DETAIL. STEP NOT SHOWN IN THIS VIEW FOR CLARITY.

75-EW-807-PVC

150-EW-819-PVC

100-D-708-DI (ON VERTICAL)

V-701

THE MUD VALVE IS LOCATED ON CL. OF AERATION TANK. SHOWN HERE FOR ILLUSTRATION PURPOSES ONLY.

SEE DRAWING PU-12 FOR 300-AS-020-DI PIPE CONTINUATION.

7400 (N.T.S.)

250-AA-113-SS

100-D-710-DI

SLG/RW #3 1219 WIDE X 508 DEEP

700 TYP.

D838

300 625 1575 650 300 695

PLAN

1:50

NOTES: -CHECKERPLATE COVER OVER CHANNEL NOT SHOWN FOR CLARITY
-EFFLUENT WATER SPRAY HEADER NOT SHOWN ON THIS DRAWING FOR CLARITY. SEE DRAWINGS PU-7, PU-9, & PU-13 FOR DETAILS

NOTE

THIS DRAWING DOES NOT REPRESENT AS-BUILT CONDITIONS.

0 1 2m

No.	Date	Revision
3	OCTOBER/95	ISSUED FOR TENDER
2	SEPT 15/95	ISSUED FOR REVIEW
1	JAN. 16/95	ISSUED FOR M.O.E.E. APPROVAL

H.A.L. Oct 6/95 — R.C.T. Oct 6/95

McNEELY ENGINEERING CONSULTANTS LTD.

Owner: TOWNSHIP OF OSNABRUCK

Project: INGLESIDE SEWAGE TREATMENT PLANT
O.C.W.A. SEWAGE WORKS PROJECT No. 40-0797

Title: AERATION TANKS
SECTIONS AND DETAILS

Design	H.A.I.	Scale	AS SHOWN	Proj. No.	M2544-4	Dwg No.
Drawn	T.H.	Check	H.A.I.	Date	SEPT 15/95	PU-7

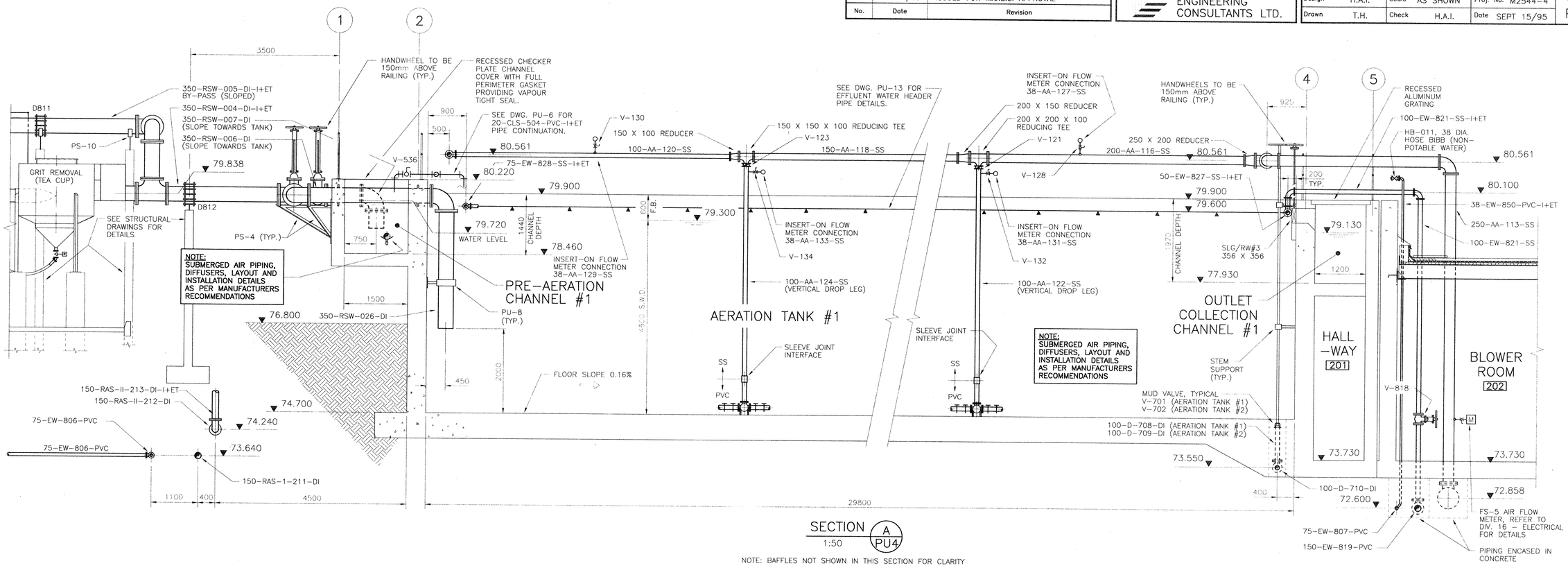

SECTION A PU4 — 1:50

NOTE: BAFFLES NOT SHOWN IN THIS SECTION FOR CLARITY

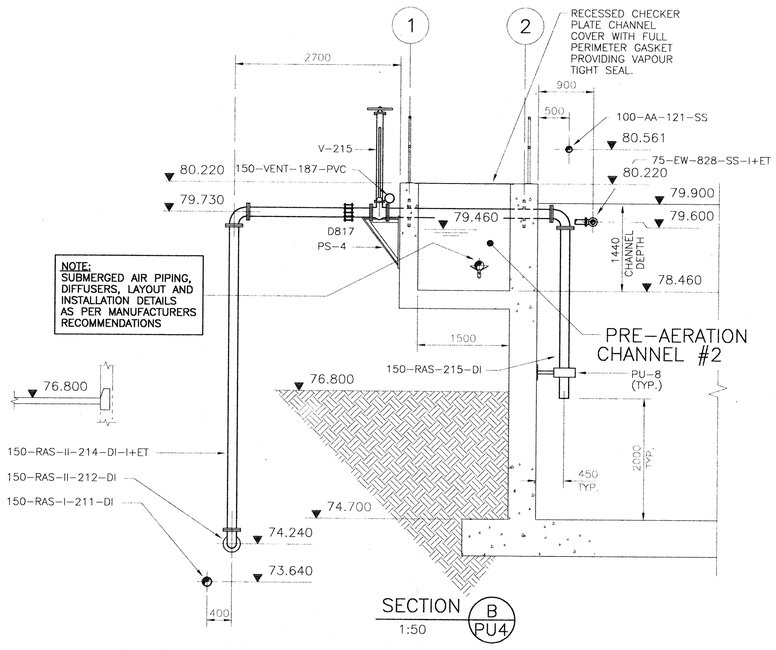

SECTION B PU4 — 1:50

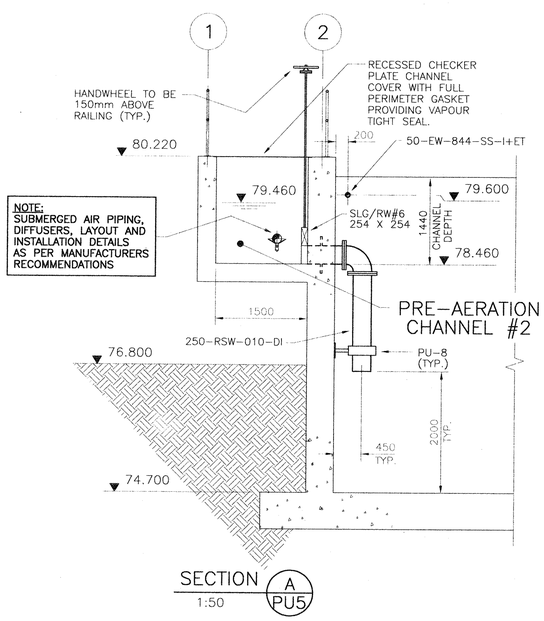

SECTION A PU5 — 1:50

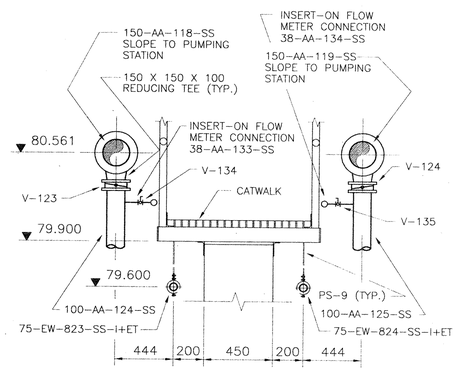

SECTION A PU6 — 1:20

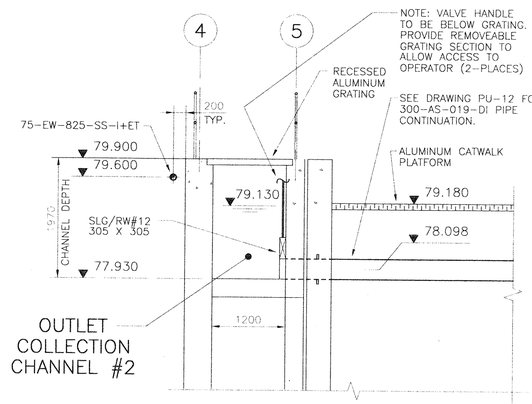

SECTION B PU6 — 1:50

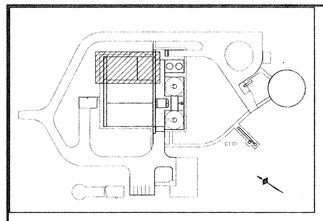

NOTE

THIS DRAWING DOES NOT REPRESENT AS-BUILT CONDITIONS.

0 1 2m

No.	Date	Revision
3	OCTOBER/95	ISSUED FOR TENDER
2	SEPT 15/95	ISSUED FOR REVIEW
1	JAN. 16/95	ISSUED FOR M.O.E.E. APPROVAL

REGISTERED PROFESSIONAL ENGINEER H.A. Ibrahim PROVINCE OF ONTARIO

REGISTERED PROFESSIONAL ENGINEER D.W. Lishman PROVINCE OF ONTARIO

McNEELY ENGINEERING CONSULTANTS LTD.

Owner: TOWNSHIP OF OSNABRUCK

Project: INGLESIDE SEWAGE TREATMENT PLANT
O.C.W.A. SEWAGE WORKS PROJECT No. 40-0797

Title: AEROBIC DIGESTERS
PLAN

Design	H.A.I.	Scale	AS SHOWN	Proj. No.	M2544-4	Dwg No.
Drawn	T.H.	Check	H.A.I.	Date	SEPT 15/95	PU-8

VALVE I.D. INDEX
(A) V-382, 75 DIA. MANUAL PLUG VALVE
(B) V-383, 75 DIA. MANUAL PLUG VALVE
(C) V-302, 100 DIA. MANUAL PLUG VALVE
(D) V-301, 100 DIA. MANUAL PLUG VALVE
(E) V-251, 100 DIA. MANUAL PLUG VALVE
(F) V-252, 100 DIA. MANUAL PLUG VALVE
(G) V-705, 150 DIA. MANUAL PLUG VALVE
(H) V-706, 150 DIA. MANUAL PLUG VALVE
(J) V-253, 100 DIA. ACTUATED PLUG VALVE
(K) V-254, 100 DIA. ACTUATED PLUG VALVE
(L) V-305, 100 DIA. CHECK VALVE
(M) V-306, 100 DIA. CHECK VALVE
(N) V-703, 100 DIA. MUD VALVE
(P) V-704, 100 DIA. MUD VALVE

EDGE OF ASPHALT

M.H. 7

100-D-712-DI
150-D-724-DI
100-D-714-DI
150-D-726-DI
200-D-711-PVC
TO M.H. 6

100-D-712-DI (SLOPE 0.7% TO MH 7)
150-D-724-DI (SLOPE 0.52% TO MH 7)
75-SCUM-387-DI-I+ET
100-WAS-253-DI-I+ET
100-D-714-DI (SLOPE 0.7% TO MH 7)
150-D-726-DI (SLOPE 0.52% TO MH 7)
75-SCUM-388-DI-I+ET(STANDBY)
100-WAS-254-DI-I+ET(STANDBY)

ACTUATED PLUG VALVES (SEE PU-15 FOR CONTROL PANEL. COORDINATE WITH ELECTRICAL CONTRACTOR)

1500 X 1800 PRECAST CONCRETE MANHOLE X 2000mm DEEP c/w 50mm RIGID INSULATION AND 19mm MARINE PLYWOOD OVERLAY ON ROOF, ALL WALLS, AND THE FLOOR. PROVIDE INSULATED ALUMINUM ACCESS HATCH c/w RECESSED PADLOCK HASP WITH FLUSH HINGED LID. HINGES, LIFTING HANDLE AND MECHANISM TO RESTRAIN HATCH IN VERTICAL POSITION. PUDDLE FLANGE PIPING PASSING THROUGH MANHOLE WALLS.

150ø MAGNETIC FLOW METERS (TO BE PROVIDED BY DIVISION 16)

25-POLY-605-PVC (PIPE RUNS 150mm DIRECTLY ABOVE PIPE 100-DS-306-DI TO CENTRIFUGE BUILDING)

TO CENTRIFUGE 100-DS-306-DI

TO DIGESTED SLUDGE FEED PUMPS

150-RAS-I-211-DI
150-RAS-II-212-DI
100-WAS-251-DI-I+ET
100-WAS-252-DI-I+ET(STANDBY)
75-SCUM-386-DI
100-DS-305-DI

100-DS-303-DI
100-DS-301-DI
100-DS-302-DI
100-DS-304-DI

MANUAL PLUG VALVE, TYPICAL UNLESS NOTED OTHERWISE

DECANT WINCH (TYP.)

150-D-723-DI
100-WAS-255-DI-I+ET
100-WAS-257-DI-I+ET
150-D-725-DI
100-WAS-256-DI-I+ET
100-WAS-258-DI-I+ET
75-SCUM-390-DI-I+ET

CATWALK

STYLE 30FJ S.S. O.P.W. SWIVEL JOINT (TYP.)

MUD VALVE BELOW (TYP.)

CHECK VALVE (TYP.)

FLYGT CP 3085 SUBMERSIBLE PUMP (TYP.) LOCATE CONTROL PANEL FOR PUMPS ON CATWALK

CONCRETE CORBEL FOR PUMP HOIST (TYP.)

2000 X 1600 PUMP AND MUD VALVE SUMP (TYP.)

75-SCUM-389-DI-I+ET

NOTE: THESE PLUG VALVES ARE TO BE NORMALLY OPEN AND USED FOR ISOLATION ONLY

P-4 P-5

PRIMARY AEROBIC DIGESTER

NOTE: SUBMERGED AIR PIPING, DIFFUSERS, LAYOUT AND INSTALLATION DETAILS AS PER MANUFACTURERS RECOMMENDATIONS

SECONDARY AEROBIC DIGESTER

NOTE: SUBMERGED AIR PIPING, DIFFUSERS, LAYOUT AND INSTALLATION DETAILS AS PER MANUFACTURERS RECOMMENDATIONS

0.16% SLOPE

0.2% SLOPE

COVERED CHANNEL FOR FUTURE EXPANSION

150-RAS-I-211-DI (SLOPE MIN 0.52%)

FOR CONT. SEE DRAWING PU-17

75-SCUM-386-DI (SLOPE MIN. 0.7%)
100-DS-305-DI (SLOPE MIN. 0.7%)
100-DS-306-DI (SLOPE MIN. 0.7%)

150-D-741-PVC-FOR MANHOLE

CATWALK

SEE DRAWING PU-22 FOR TYP. STEP OVER PIPE DETAIL. STEP NOT SHOWN IN THIS VIEW FOR CLARITY.

400 X 400 X 300 REDUCING TEE
300-AA-115-SS (VERTICAL DROP LEG) V-120 ON DROP LEG

400 X 400 X 200 REDUCING TEE

200-AA-114-SS (VERTICAL DROP LEG) V-119 ON DROP LEG

400-AA-111-SS

KNOCK OUT WALL FOR FUTURE EXPANSION

V-136

SEE DRAWING PU-15 FOR 400-AA-111-SS PIPE CONTINUATION. NOTE THAT PIPE PASSES THROUGH ROOF.

BLIND FLANGE

INSERT-ON FLOW METER CONNECTION (ON VERTICAL DROP LEG) 38-AA-137-SS & V-138

INSERT-ON FLOW METER CONNECTION (ON VERTICAL DROP LEG) 38-AA-136-SS & V-137

INSERT-ON FLOW METER CONNECTION 38-AA-135-SS

FOR CONTINUATION SEE DRAWING PU-5

PLAN
1:50

AERATION TANK 2

NOTE

THIS DRAWING DOES NOT REPRESENT AS-BUILT CONDITIONS.

0 1 2m

No.	Date	Revision
3	OCTOBER/95	ISSUED FOR TENDER
2	SEPT 15/95	ISSUED FOR REVIEW
1	JAN. 16/95	ISSUED FOR M.O.E.E. APPROVAL

REGISTERED PROFESSIONAL ENGINEER H.A. Ibrahim 02693 PROVINCE OF ONTARIO

REGISTERED PROFESSIONAL ENGINEER D.W. Lishman OCT 6 1995 PROVINCE OF ONTARIO

McNEELY ENGINEERING CONSULTANTS LTD.

Owner: TOWNSHIP OF OSNABRUCK

Project: INGLESIDE SEWAGE TREATMENT PLANT
O.C.W.A. SEWAGE WORKS PROJECT No. 40-0797

Title: AEROBIC DIGESTERS
SECTIONS & DETAILS

Design	H.A.I.	Scale	AS SHOWN	Proj. No.	M2544-4	Dwg No.
Drawn	D.M.R.	Check	H.A.I.	Date	SEPT 15/95	PU-9

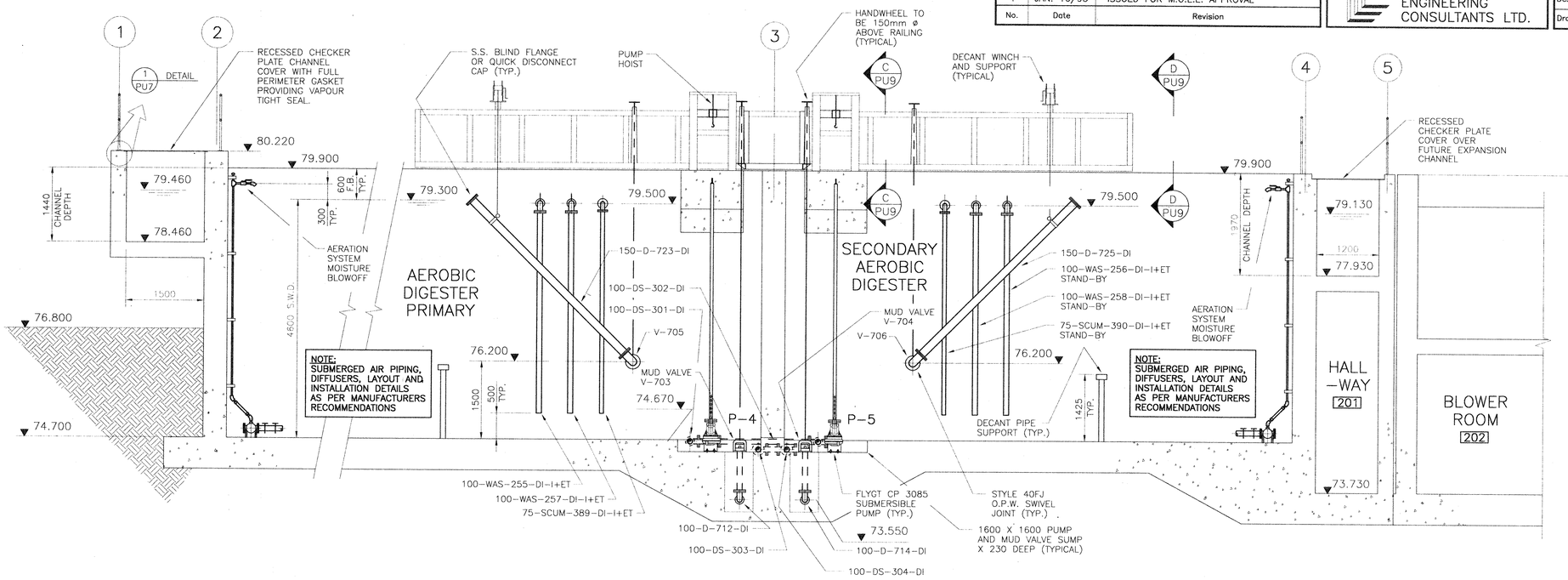

SECTION A PU8 1:50

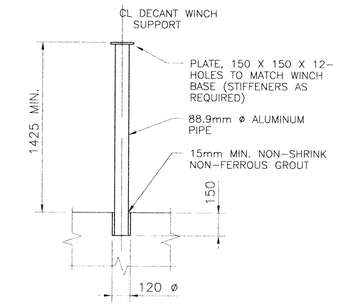

SECTION D PU9 1:50

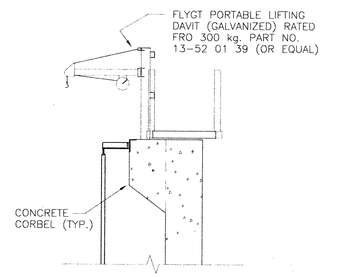

SECTION C PU9 1:50

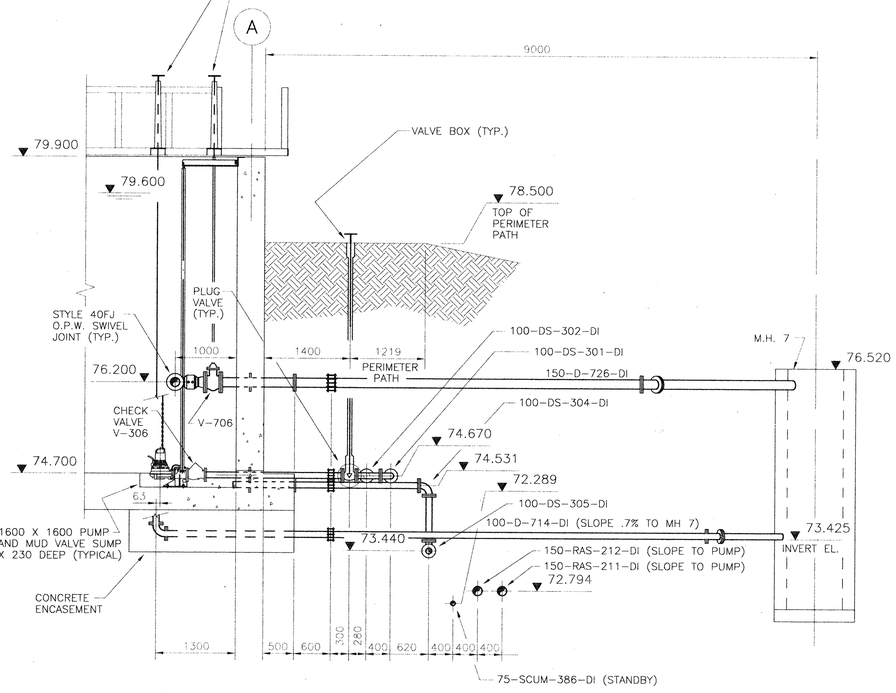

SECTION B PU8 1:50

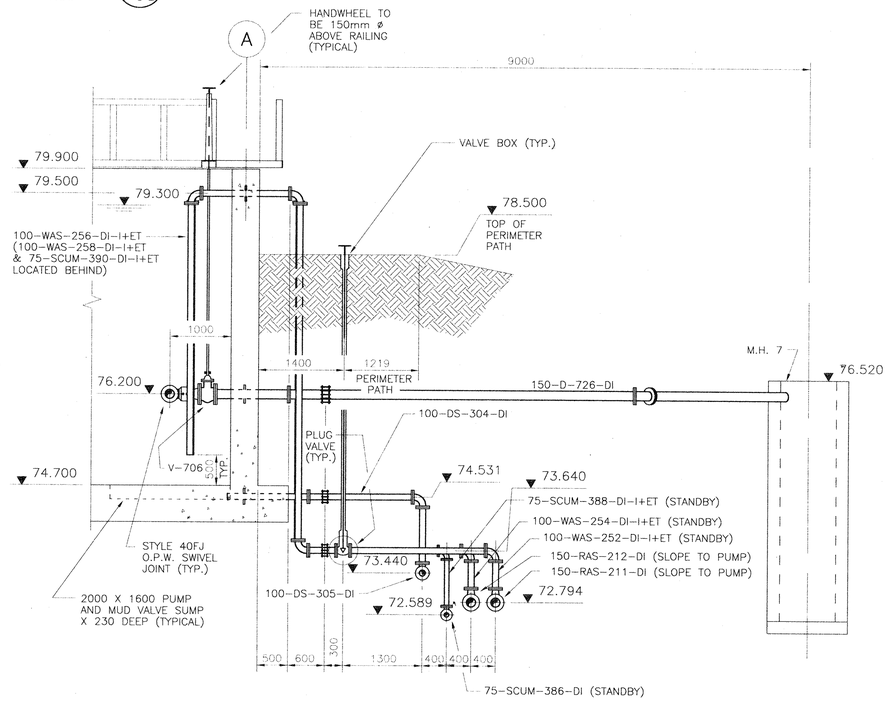

SECTION C PU8 1:50

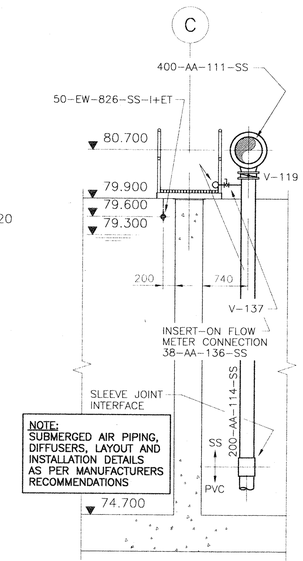

SECTION D PU8 1:50

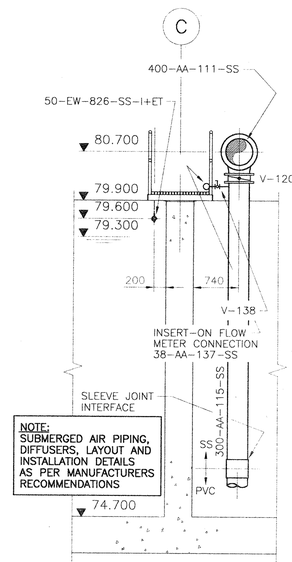

SECTION E PU8 1:50

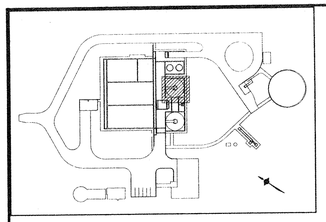

NOTE

THIS DRAWING DOES NOT REPRESENT AS-BUILT CONDITIONS.

0 1 2m

No.	Date	Revision
3	OCTOBER/95	ISSUED FOR TENDER
2	SEPT 15/95	ISSUED FOR REVIEW
1	JAN. 16/95	ISSUED FOR M.O.E.E. APPROVAL

REGISTERED PROFESSIONAL ENGINEER H.A. Ibrahim 93/6/95 PROVINCE OF ONTARIO

REGISTERED PROFESSIONAL ENGINEER D.W. Lishman 95/6/98 PROVINCE OF ONTARIO

McNEELY ENGINEERING CONSULTANTS LTD.

Owner	TOWNSHIP OF OSNABRUCK
Project	INGLESIDE SEWAGE TREATMENT PLANT O.C.W.A. SEWAGE WORKS PROJECT No. 40-0797
Title	SECONDARY CLARIFIER PLAN

Design	H.A.I.	Scale	AS SHOWN	Proj. No. M2544-4	Dwg No. PU-10
Drawn	T.H.	Check	H.A.I.	Date SEPT 15/95	

SLOPE TROUGH FLOOR FROM THIS CORNER 0.3% IN BOTH DIRECTIONS TO LOW POINT IN OPPOSITE CORNER. USE GROUTING TO CREATE THIS SLOPE IN STAINLESS STEEL TROUGH FLOOR.

14500

12200

CHLORINATION RING DRAIN. SEE DETAIL ON DRAWING PU-11.

EL. 77.670

EFFLUENT TROUGH

WEIR

RAKE ARM

CHLORINATION WEIR WASH PIPE RING TO HAVE 2.4mmø INJECTION ORFICES DRILLED INTO TOP OF THE PIPE RING EQUALLY SPACED EVERY 152mm ON CENTER. PROVIDE DRAIN AS DETAILED. SLOPE PIPE RING TO DRAIN TO ALLOW PIPE TO COMPLETELY DRAIN. SLOPE MAIN SUPPLY PIPE TO CHEMICAL ROOM.

SCUM BAFFLE

SECONDARY CLARIFIER #2

EFFLUENT TROUGH

DRIVE PLATFORM

CONTROL PANEL AND SUPPORT (COORDINATE WITH ELECTRICAL) PROVIDE OPENING IN HANDRAIL TO ALLOW ACCESS

DIRECTION OF ROTATION

FEEDWELL

920 MIN.

PRIMARY DRIVE

BLADES WITH ADJUSTABLE SQUEEGEES

ACCESS WALKWAY

SCUM BAFFLE SUPPORT

CHLORINE INJECTION INTO WEIR WASH RING. 50ø SCH. 40 PVC PIPE AND FITTINGS. PIPE SUPPORTS AT EVERY WEIR BOLT LOCATION. SEE DRAWING PU-11 FOR DETAILS.

SCUM DEFLECTOR

SCUM TROUGH

EFFLUENT TROUGH

EFFLUENT TROUGH

CONCRETE BENCHING (SEE STRUCTURAL DRAWINGS FOR DETAILS)

STEEL RING (BY CONTRACTOR UNDER MANUFACTURERS SUPERVISION. SEE STRUCTURAL DWG. S09, SECTION B, FOR DETAIL)

A PU11

B PU11

B

A

D

E

V-538

V-541

20-CLS-509-PVC-I+ET

50-CLS-506-PVC-I+ET

CHLORINE INJECTION INTO EFFLUENT WATER BASIN

300-AS-018-DI

SCUM CHAMBER

EFFLUENT WATER BASIN

HIGH LIFT EFFLUENT WATER PUMP (P 25)

LOW LIFT EFFLUENT WATER PUMP (P 23)

75-EW-801-PVC (SEE PU-13 FOR DETAILS)

100-EW-817-PVC (SEE PU-13 FOR DETAILS)

FLOCCULATION BASIN

300-AS-019-DI (BY-PASS TO OUTLET COLLECTION CHANNEL #2)

SLG#14 305 X 305

MIXED LIQUOR DISTRIBUTION CHANNEL

RAISED CHECKERPLATE ROOF SECTION

ALUMINUM SERVICE HATCH c/w RECESSED PADLOCK HASP WITH FLUSH HINGED LID, HINGES, LIFTING HANDLE(S) AND MECHANISM TO RESTRAIN HATCH IN A VERTICAL POSITION. (BILCO OR EQUAL - TYPICAL)

7 8 10 11

4200 3500

PLAN

1:50

7

¢L. CENTER CAGE & RAKE ARMS

¢L. CENTER CAGE & RAKE ARMS

914 43 500 1219

SLUDGE SUMP

200-RAS-201-DI

REFRIGERATED AUTOMATIC SAMPLER

WALL MOUNTED CHLORINE RESIDUAL ANALYZER

600 INFLUENT COLUMN

600-AS-012-DI

31° TYP.

53.75° TYP.

SECONDARY CLARIFIER #2

600 X 450 REDUCER (TYP.)

450-AS-014-DI

450 X 300 REDUCER (TYP.)

PIPING ENCASED IN CONCRETE

300-AS-016-DI

SEE DRAWING PU-6 FOR 300-AS-019-DI BY-PASS CONTINUATION TO OUTLET COLLECTION CHANNEL #2

E

MONORAIL CRANE BEAM

SUMP SUMP

600 Typ.

2190

1209

SEE DRAWING PU-12 FOR 300-AS-018-DI PIPE CONTINUATION.

CONTROL PANEL FOR ACTUATED PLUG VALVES FROM PRIMARY DIGESTER TANK ON PIPES 100-WAS-251-DI AND 100-WAS-253-DI. SEE DRAWING PU-8 FOR VALVE LOCATIONS

G

P-2

SCUM CHAMBER

EFFLUENT WATER BASIN

BLOWER ROOM [202]

RAS/WAS PUMP ROOM [206]

PIPING ENCASED IN CONCRETE BELOW FLOOR SLAB

PART PLAN @ EL. 76.000

1:50

NOTE

THIS DRAWING DOES NOT REPRESENT AS-BUILT CONDITIONS.

0 1 2m

No.	Date	Revision
3	OCTOBER/95	ISSUED FOR TENDER
2	SEPT 15/95	ISSUED FOR REVIEW
1	JAN. 16/95	ISSUED FOR M.O.E.E. APPROVAL

H.A. Ibrahim — 96/09/97 — PROVINCE OF ONTARIO

D.W. Lishman — DEC 6 95 — PROVINCE OF ONTARIO

McNEELY ENGINEERING CONSULTANTS LTD.

Owner	TOWNSHIP OF OSNABRUCK
Project	INGLESIDE SEWAGE TREATMENT PLANT O.C.W.A. SEWAGE WORKS PROJECT No. 40-0797
Title	SECONDARY CLARIFIER SECTIONS AND DETAILS

Design	H.A.I.	Scale	AS SHOWN	Proj. No. M2544-4	Dwg No. PU-11
Drawn	T.H.	Check	H.A.I.	Date SEPT 15/95	

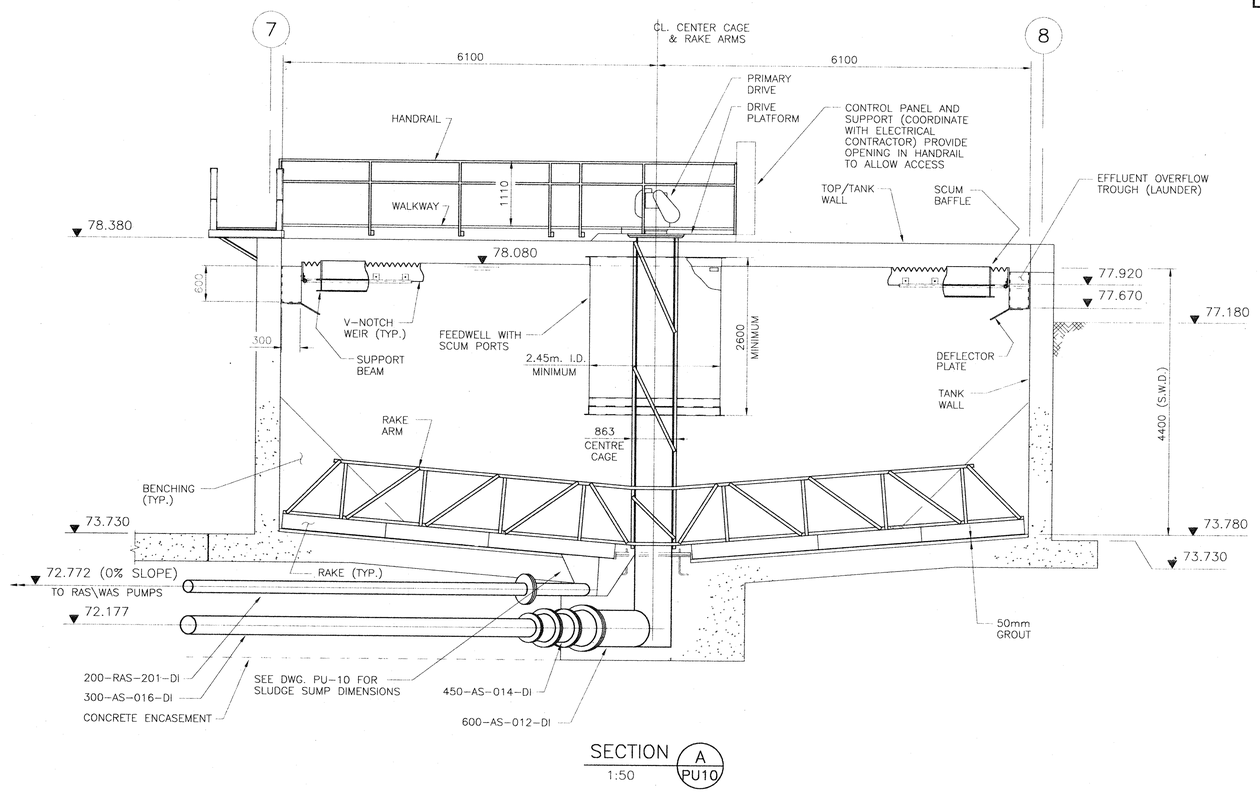

SECTION A / PU10
1:50

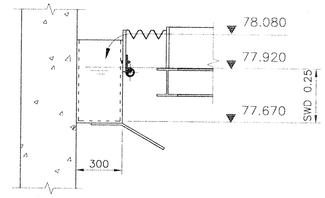

EFFLUENT OVERFLOW TROUGH
N.T.S.

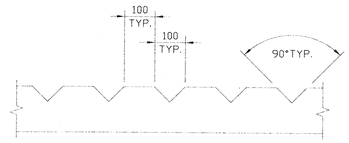

NOTE: PROVIDE FIVE "V" NOTCHES PER METRE

S.S. 90° V-NOTCH
1:10

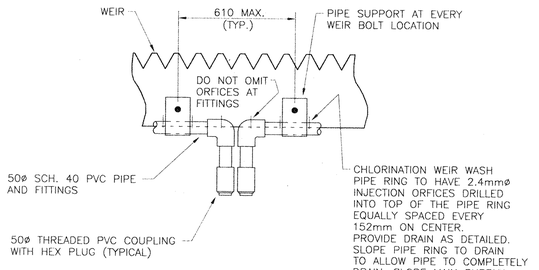

CHLORINATION RING DRAIN DETAIL
N.T.S.

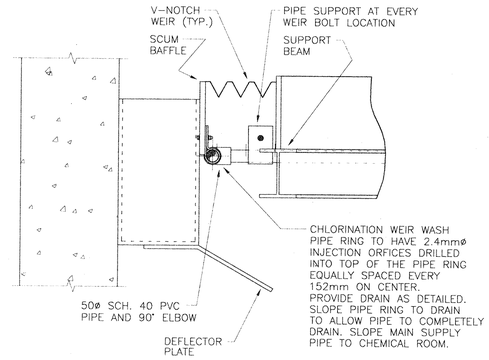

CHLORINATION RING CORNER DETAIL
N.T.S.

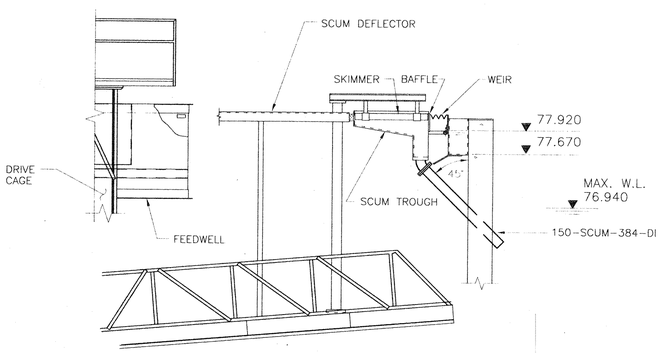

SECTION B / PU10
1:50

WEIR WASH SYSTEM NOTES:
1) PVC CHLORINATION WEIR WASH PIPING TO BE PRESSURE TESTED TO 1035 KPa (150 psi) BEFORE DRILLING WASH ORFICES.
2) ORFICES TO BE ALIGNED WITH WEIR NOTCHES WITHIN ± 1mm
3) ORFICES TO BE ORIENTED VERTICALLY

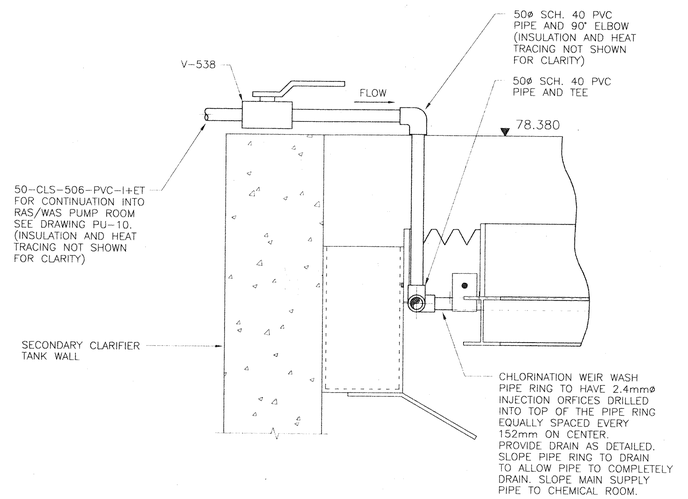

CHLORINATION RING INJECTION DETAIL
N.T.S.

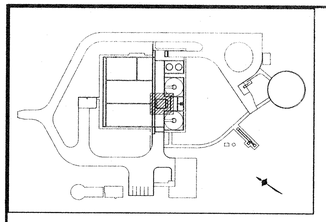

NOTE

THIS DRAWING DOES NOT REPRESENT AS-BUILT CONDITIONS.

0 1 2m

No.	Date	Revision
3	OCTOBER/95	ISSUED FOR TENDER
2	SEPT 15/95	ISSUED FOR REVIEW
1	JAN. 16/95	ISSUED FOR M.O.E.E. APPROVAL

McNEELY ENGINEERING CONSULTANTS LTD.

Owner: TOWNSHIP OF OSNABRUCK

Project: INGLESIDE SEWAGE TREATMENT PLANT
O.C.W.A. SEWAGE WORKS PROJECT No. 40-0797

Title: FLOCCULATION BASIN & SCUM CHAMBER
PLAN AND SECTIONS

Design	H.A.I.	Scale	AS SHOWN	Proj. No.	M2544-4	Dwg No.
Drawn	T.H.	Check	H.A.I.	Date	SEPT 15/95	PU-12

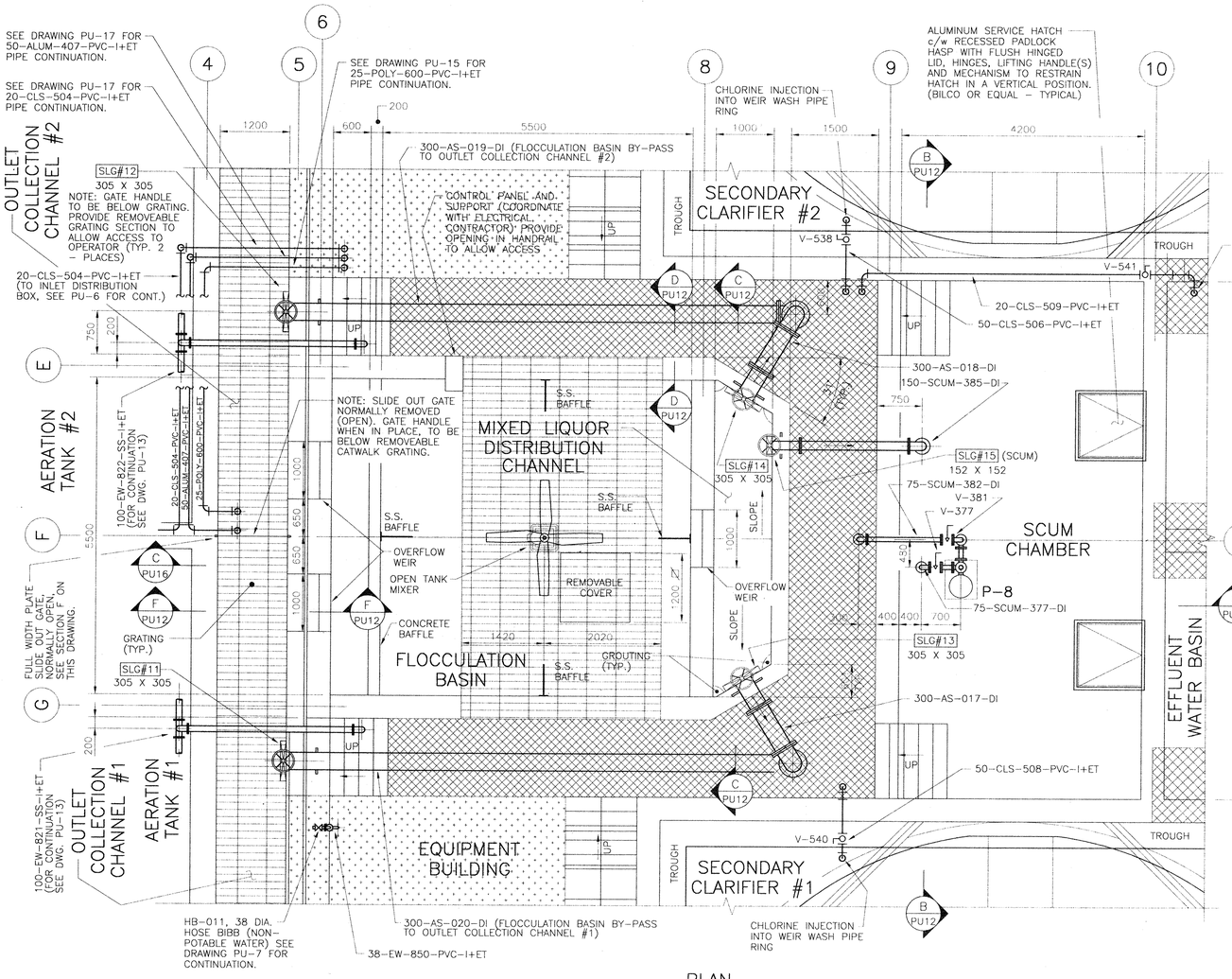

PLAN
1:50

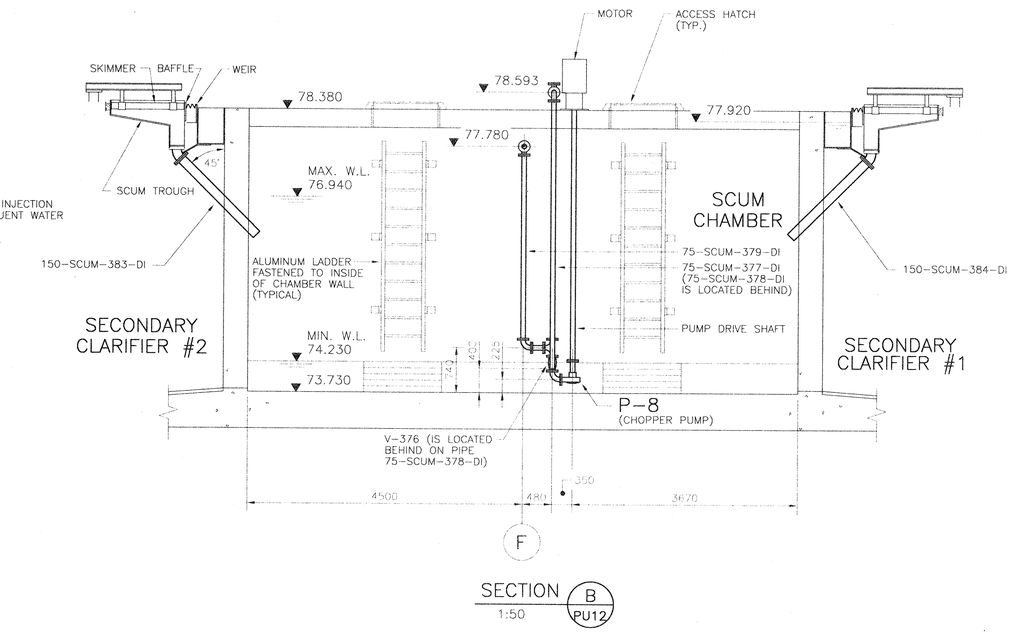

SECTION B PU12
1:50

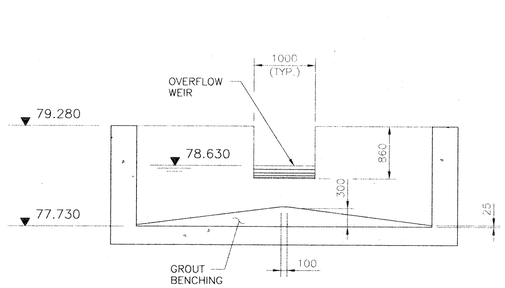

SECTION C PU12
1:50

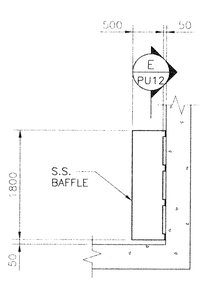

SECTION D PU12
1:50

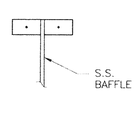

SECTION E PU12
1:20

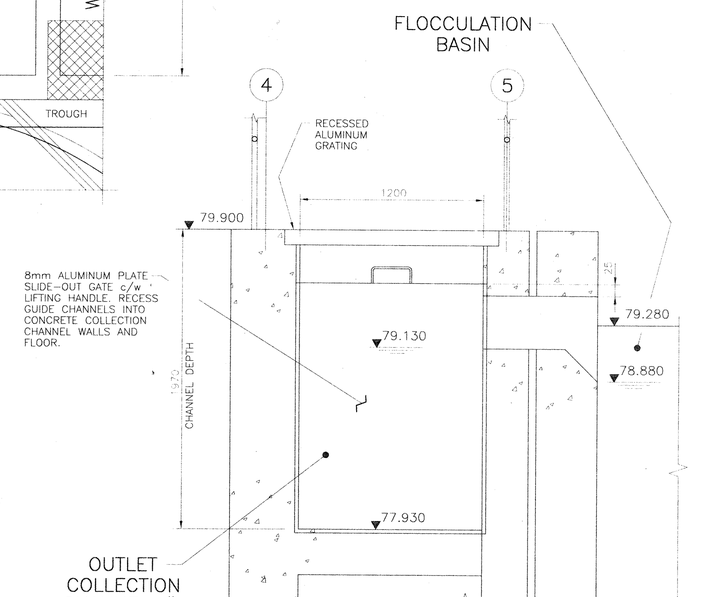

SECTION F PU12
1:20

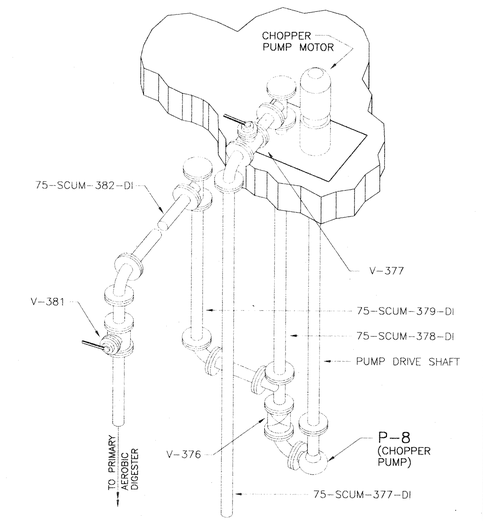

SCUM CHAMBER PUMP AND PIPING LAYOUT

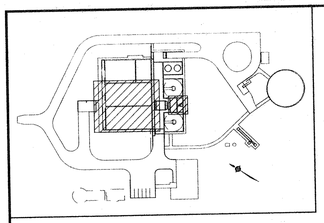

NOTE

THIS DRAWING DOES NOT REPRESENT AS-BUILT CONDITIONS.

0 500 1000mm

No.	Date	Revision
3	OCTOBER/95	ISSUED FOR TENDER
2	SEPT 15/95	ISSUED FOR REVIEW
1	JAN 16/95	ISSUED FOR M.O.E.E. APPROVAL

R.W. HERNBERGER — PROFESSIONAL ENGINEER — PROVINCE OF ONTARIO — Oct 6/95

D.W. LISHMAN — PROFESSIONAL ENGINEER — PROVINCE OF ONTARIO — Oct 6/95

McNEELY ENGINEERING CONSULTANTS LTD.

Owner	TOWNSHIP OF OSNABRUCK				
Project	INGLESIDE SEWAGE TREATMENT PLANT O.C.W.A. SEWAGE WORKS PROJECT No. 40-0797				
Title	EFFLUENT WATER BASIN AND AERATION TANK FOAM CONTROL PIPING PLANS, SECTIONS AND DETAILS				
Design	W.H.	Scale	AS SHOWN	Proj. No.	M2544-4
Drawn	E.C.	Check	D.W.L.	Date	SEPT 15/95
				Dwg No.	PU-13

SAMPLER SOURCE TUBE TO BE RUN INSIDE 25mm STAINLESS STEEL TUBING CAST INTO CONCRETE SLAB FOR CONTINUATION SEE DRAWING PU-15

10 mm I.D. VINYL OR TEFLON LINED POLYETHELENE TUBING w/ PROTECTIVE COATING AND c/w ACCESSORIES AS SUPPLIED BY THE MANUFACTURER. RUN TUBE TO REFRIGERATED SAMPLER AND CONNECT PER MANUFACTURER. SAMPLER TUBE TO BE RUN INSIDE 25mm STAINLESS STEEL TUBING CAST INTO CONCRETE SLAB

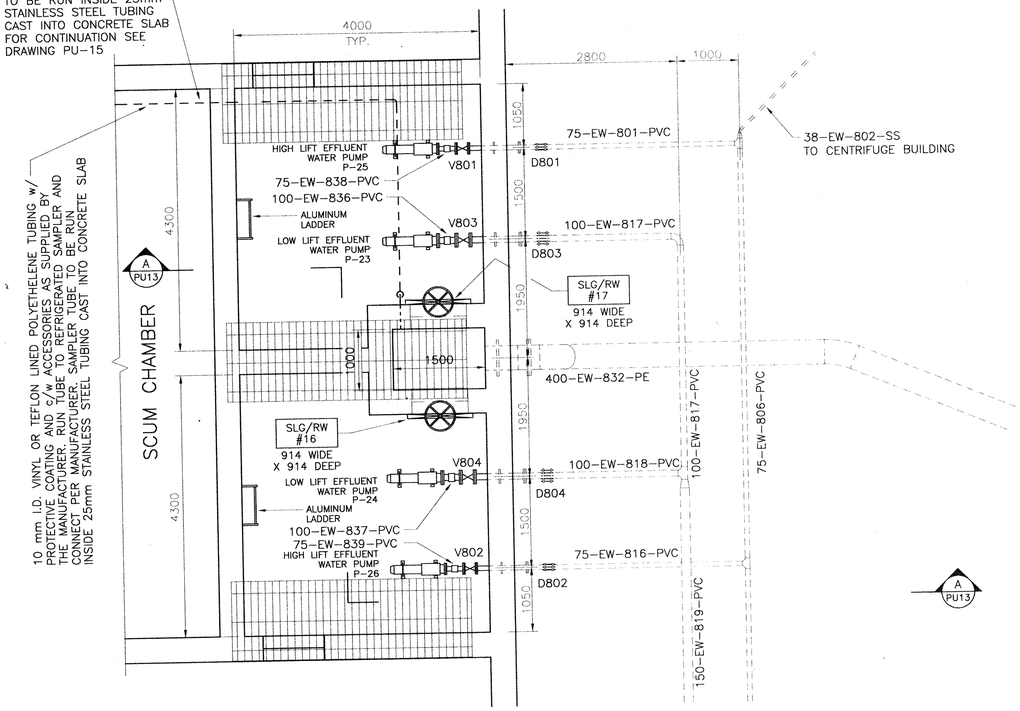

PLAN
1:50

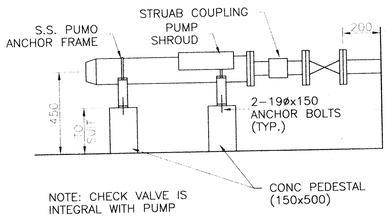

NOTE: CHECK VALVE IS INTEGRAL WITH PUMP

PUMP DETAIL (TYP.)
N.T.S.

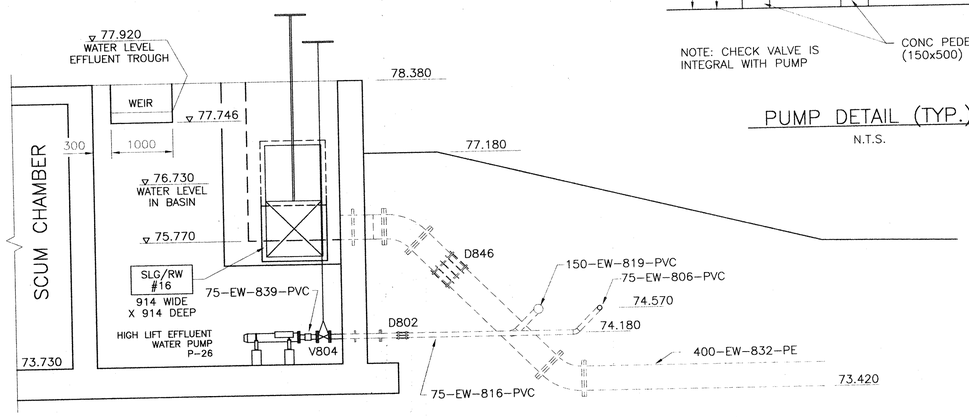

SECTION
1:50 A PU13

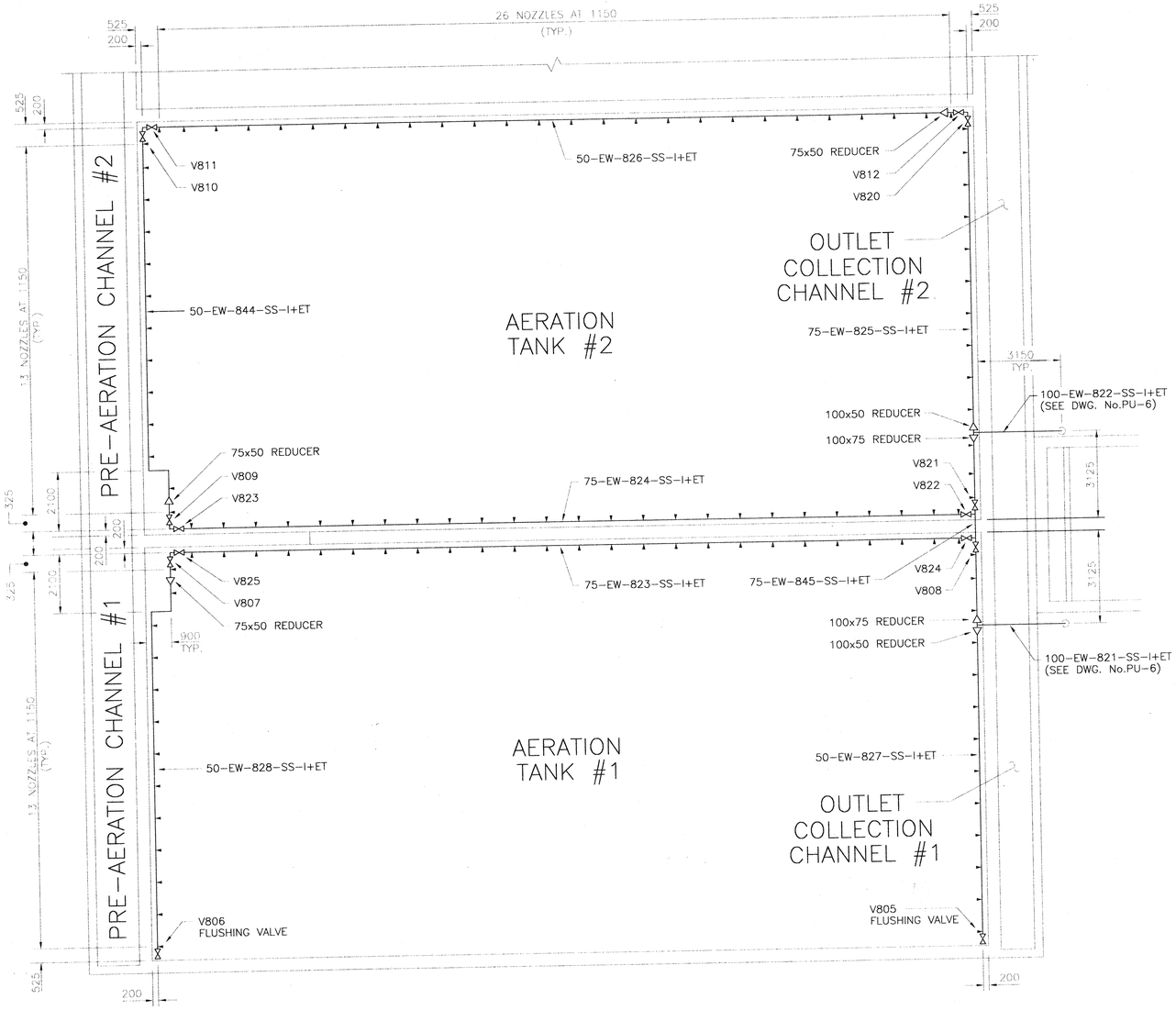

AERATION TANK FOAM CONTROL PIPE AND NOZZLE LAYOUT
1:100

2544PU13

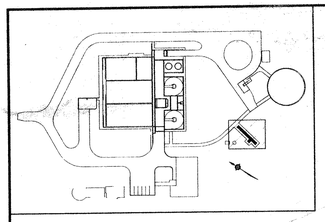

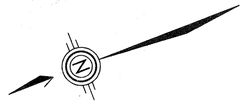

NOTE

THIS DRAWING DOES NOT REPRESENT AS-BUILT CONDITIONS.

0 250 500mm

No.	Date	Revision
3	OCTOBER/95	ISSUED FOR TENDER
2	SEPT 15/95	ISSUED FOR REVIEW
1	JAN 16/95	ISSUED FOR M.O.E.E. APPROVAL

McNEELY ENGINEERING CONSULTANTS LTD.

Owner: TOWNSHIP OF OSNABRUCK

Project: INGLESIDE SEWAGE TREATMENT PLANT
O.C.W.A. SEWAGE WORKS PROJECT No. 40-0797

Title: PARSHALL FLUME
PLAN AND SECTIONS

Design	J.V.G	Scale	AS SHOWN	Proj. No.	M2544-4	Dwg No.
Drawn	E.C.	Check	D.W.L.	Date	SEPT 15/95	PU-14

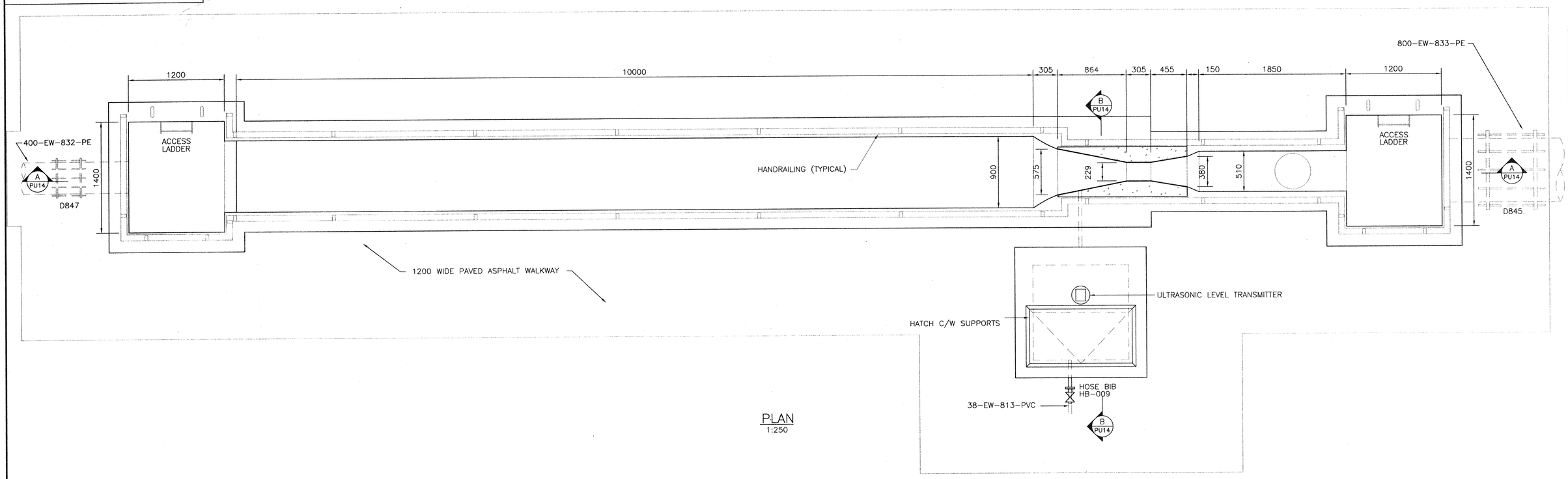

PLAN
1:250

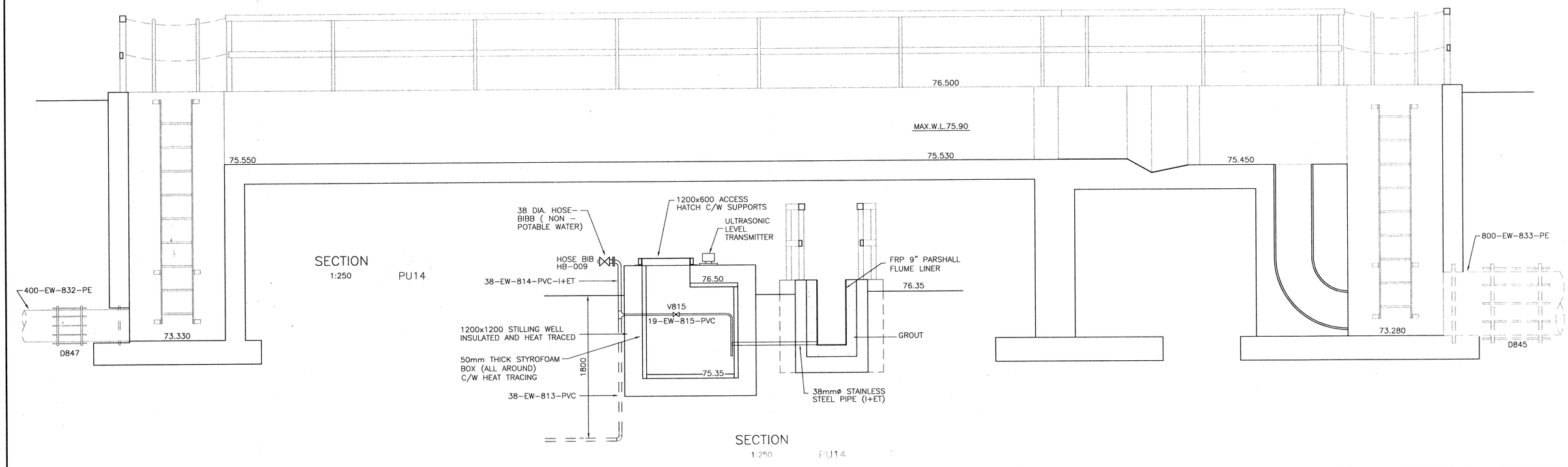

SECTION
1:250 PU14

SECTION
1:250 PU14

NOTE

THIS DRAWING DOES NOT REPRESENT AS-BUILT CONDITIONS.

0 1 2m

No.	Date	Revision
3	OCTOBER/95	ISSUED FOR TENDER
2	SEPT 15/95	ISSUED FOR REVIEW
1	JAN. 16/95	ISSUED FOR M.O.E.E. APPROVAL

REG. PROFESSIONAL ENGINEER H.A. Ibrahim 036195 PROVINCE OF ONTARIO

REG. PROFESSIONAL ENGINEER D.W. Lishman 036194 PROVINCE OF ONTARIO

McNEELY ENGINEERING CONSULTANTS LTD.

Owner: TOWNSHIP OF OSNABRUCK

Project: INGLESIDE SEWAGE TREATMENT PLANT
O.C.W.A. SEWAGE WORKS PROJECT No. 40-0797

Title: BLOWER & RAS/WAS PUMP ROOMS
PLAN

Design	H.A.I.	Scale	AS SHOWN	Proj. No.	M2544-4	Dwg No.
Drawn	T.H.	Check	H.A.I.	Date	SEPT 15/95	PU-15

AERATION TANK #1

AERATION TANK #2

HALLWAY 201

POLYMER ROOM 203

BLOWER ROOM 202

RAS/WAS PUMP ROOM 206

SCUM CHAMBER

EFFLUENT WATER BASIN

SECONDARY CLARIFIER #1

SECONDARY CLARIFIER #2

PLAN
1:50

NOTE

THIS DRAWING DOES NOT REPRESENT AS-BUILT CONDITIONS.

0 1 2m

No.	Date	Revision
3	OCTOBER/95	ISSUED FOR TENDER
2	SEPT 15/95	ISSUED FOR REVIEW
1	JAN. 16/95	ISSUED FOR M.O.E.E. APPROVAL

H.T.L. 26/9/95 — Sept 6 1995

McNEELY ENGINEERING CONSULTANTS LTD.

Owner	TOWNSHIP OF OSNABRUCK
Project	INGLESIDE SEWAGE TREATMENT PLANT O.C.W.A. SEWAGE WORKS PROJECT No. 40-0797
Title	BLOWER & RAS/WAS PUMP ROOMS SECTIONS

Design	H.A.I.	Scale	AS SHOWN	Proj. No. M2544-4	Dwg No. PU-16
Drawn	T.H.	Check	H.A.I.	Date SEPT 15/95	

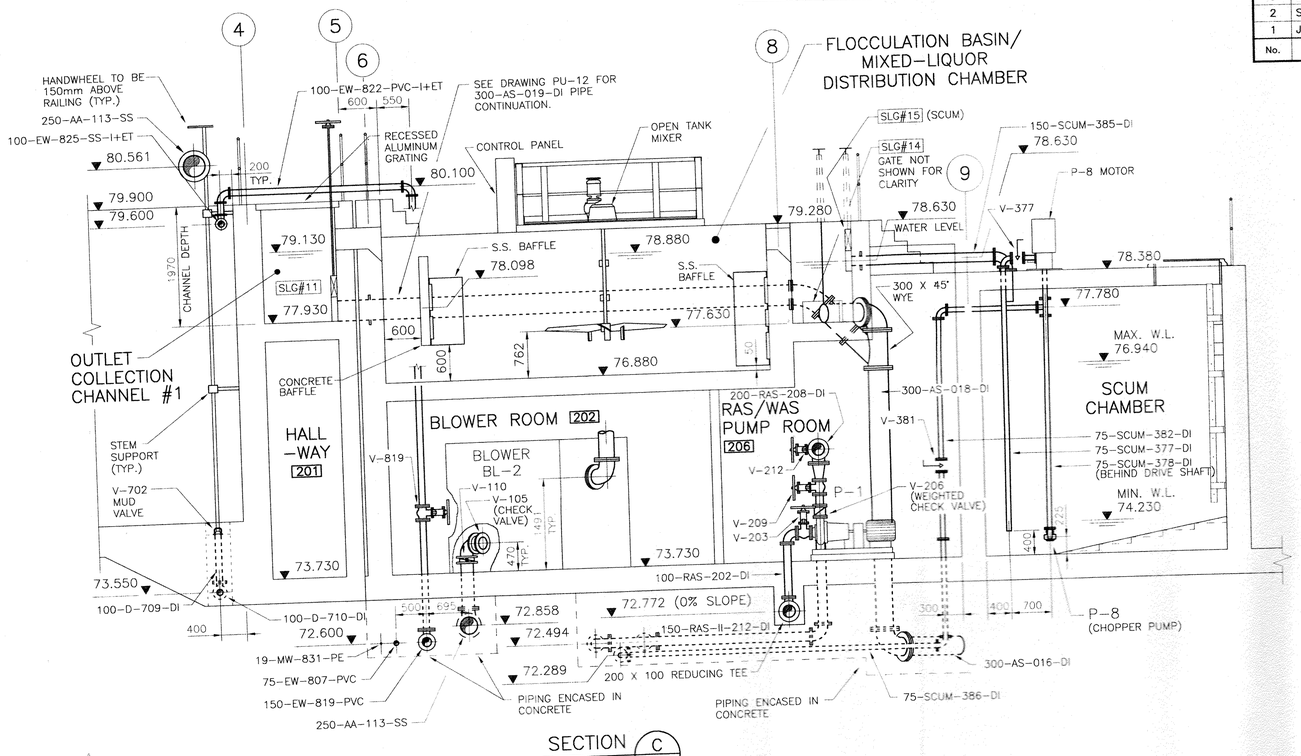

SECTION C (PU15) 1:50

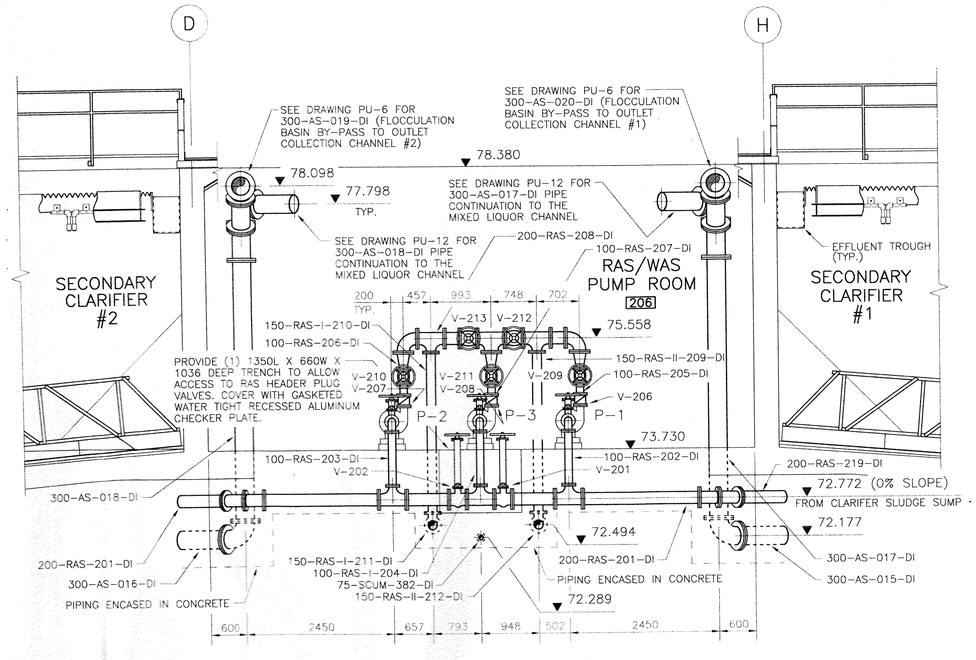

SECTION B (PU15) 1:50

NOTE: PUMP CONN. EL'S BASED ON 100 mm HIGH PLINTH.

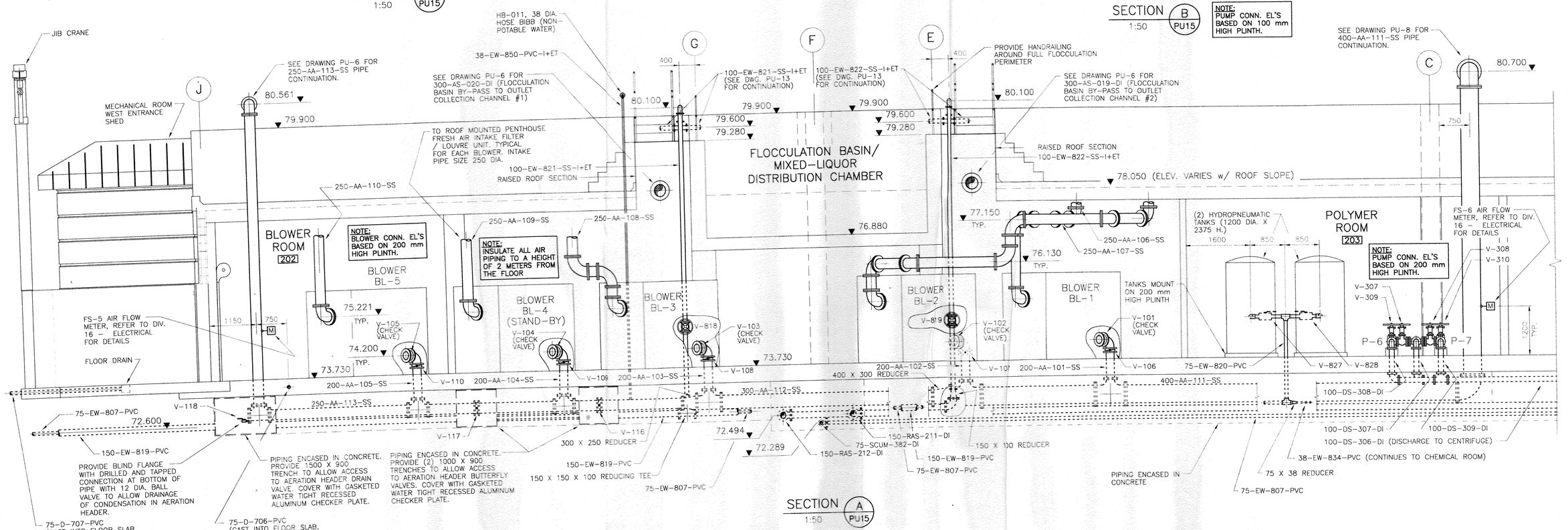

SECTION A (PU15) 1:50

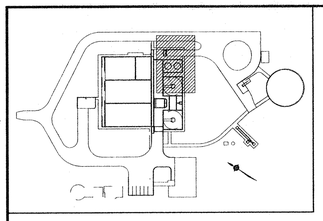

NOTE:
PIPING SHOWN HERE FOR ILLUSTRATION PURPOSES ONLY. SEE DRAWING P-9 FOR ALL CHEMICAL PIPING DETAILS.

0 1 2m

No.	Date	Revision
3	OCTOBER/95	ISSUED FOR TENDER
2	SEPT 15/95	ISSUED FOR REVIEW
1	JAN 16/95	ISSUED FOR M.O.E.E. APPROVAL

REGISTERED PROFESSIONAL ENGINEER H.A. IBRAHIM PROVINCE OF ONTARIO Oct 6/95

REGISTERED PROFESSIONAL ENGINEER D.W. LISHMAN PROVINCE OF ONTARIO Oct 6/95

McNEELY ENGINEERING CONSULTANTS LTD.

Owner: TOWNSHIP OF OSNABRUCK

Project: INGLESIDE SEWAGE TREATMENT PLANT
O.C.W.A. SEWAGE WORKS PROJECT No. 40-0797

Title: CHEMICAL ROOMS
PLAN

Design	W.H.	Scale	AS SHOWN	Proj. No.	M2544-4	Dwg No.
Drawn	E.C.	Check	D.W.L.	Date	SEPT 15/95	PU-17

FOR CONTINUATION OF CHLORINE PIPING SEE DRAWINGS:
- PU-6/12 FOR PIPING TO INLET DISTRIBUTION BOX (20-CLS-504-PVC-I+ET)
- PU-12 FOR PIPING TO EFFLUENT WATER BASIN (20-CLS-509-PVC-I+ET)
- PU-12 FOR PIPING TO SECONDARY CLARIFIERS (50-CLS-506/508-PVC-I+ET)
- PU-15 FOR PIPING TO RAS PIPES #1 AND #2 (20-CLS-505/507-PVC)

FORCEMAIN TO RUN BELOW SUMP

500 X 500 SUMP X 450 DEEP

C PU18

50-CLS-515-PVC

WALL MOUNTED EYE WASH STATION c/w 16oz BOTTLE AND FLUID, FENCHAL MODEL FNL-512 OR EQUAL.

FOR CONTINUATION SEE DRAWING NO. PU-8

2700 400 400 400

EDGE/ROAD

℄ ROAD

NOTE
THIS DRAWING DOES NOT REPRESENT AS-BUILT CONDITIONS.

300-ST-914-PVC

FOR CONTINUATION TO HEAD WALL 2 SEE DRAWING NO. G-5

50-ALUM-404-PVC 50-D-741-PVC (FORCEMAIN)

ALUM PUMPS P27 AND P28, SEE DRAWING P-9 FOR PUMP PIPE/VALVE MANIFOLDING

HALLWAY 201

50-CLS-503-PVC

50-CLS-517-PVC

201.4

P-29

201.6

500 X 500 SUMP X 450 DEEP

50-CLS-516-PVC

50-CLS-515-PVC

FLOOR SLOPE TOWARDS DRAIN SUMP

38-EW-834-PVC

V-506 (DRAIN)

V-505

V-508 (DRAIN)

V-507

1300 (TYP.)

P28

P27

CHLORINE ROOM 205

100-VENT-189-PVC

100-VENT-190-PVC

1600

1000

1600

CHLORINE TANK T103

CHLORINE TANK T104

TANK OVER FLOW PIPE

50-ALUM-412-PVC

50-CLS-519-DI

50-CLS-520-DI

P18

P17

P16

1000 (TYP.)

V-503

50-CLS-518-PVC

V-504

HOSE BIBB HB-012

HOSE BIBB HB-004

CHLORINE PUMPS P16, P17 AND P18, SEE DRAWING P-9 FOR PUMP PIPE/VALVE MANIFOLDING

1000

38 DIA. HOSE-BIBB (NON - POTABLE WATER)

50-ALUM-417-PVC

TANK OVER FLOW PIPE

ALUM TANK T102

100-VENT-191-PVC

50-ALUM-414-PVC

1750

1750

V-407

V-408 (DRAIN)

V-404

50-ALUM-416-PVC

FLOOR SLOPE TOWARDS DRAIN SUMP

50-ALUM-412-PVC

206.2

ALUM ROOM 205

1200

50-ALUM-415-PVC

ALUM TANK T101

50-ALUM-413-PVC

V-406 (DRAIN)

V-405

V-403

100-VENT-192-PVC

1000

TANK OVER FLOW PIPE

500 X 500 SUMP X 600 DEEP AND c/w SUMP PUMP

P19

205.1

50-D-741-PVC (FORCEMAIN)

150-RAS-II-212-DI (SLOPE MIN. 0.52%)

ALUMINUM ACCESS LADDER ATTACHED TO INTERIOR OF MH WALL

150ø MAGNETIC FLOW METERS (TO BE PROVIDED BY DIVISION 16)

FLEX JOINT (TYP.)

100-DS-305-DI (SLOPE)

75-SCUM-386-DI (SLOPE)

150-RAS-I-211-DI (SLOPE MIN 0.52%)

1500 X 1800 PRECAST CONCRETE MANHOLE X 2000mm DEEP c/w 50mm RIGID INSULATION AND 19mm MARINE PLYWOOD OVERLAY ON ROOF, ALL WALLS, AND THE FLOOR. PROVIDE INSULATED ALUMINUM ACCESS HATCH c/w RECESSED PADLOCK HASP WITH FLUSH HINGED LID. HINGES, LIFTING HANDLE AND MECHANISM TO RESTRAIN HATCH IN VERTICAL POSITION (BILCO OR EQUAL). PUDDLE FLANGE PIPING PASSING THROUGH MANHOLE WALLS. MANHOLE PER OPSD-1100-010.

TANK OVER FLOW PIPE

D831

D832

75-SCUM-386-DI (SLOPE MIN. 0.7%)

400 400 400

100-DS-305-DI (SLOPE MIN. 0.7%)

100-DS-306-DI (SLOPE MIN. 0.7%)

50-CLS-518-PVC

V-402 D830 (DRAIN)

D828

D829

50-ALUM-417-PVC

V-401 w/ QUICK DISCONNECT END

V-502 (DRAIN)

V-501 w/ QUICK DISCONNECT END

100-DS-306-DI (SLOPE)

100-D-732-PVC (FROM SUMP BELOW STAIRS)

76.55 76.40 76.55

76.385

D848

200-D-717-PVC

25-POLY-605-PVC (PIPE RUNS 150mm DIRECTLY ABOVE PIPE 100-DS-306-DI TO CENTRIFUGE BUILDING)

TO CENTRIFUGE

200-D-711-PVC

CHEMICAL LOADING BAY

50-D-740-PVC (FORCEMAIN)

11

FOR CONTINUATION TO MANHOLE 6 SEE DRAWING NO. G-5

FOR CONTINUATION OF ALUM PIPING SEE DRAWINGS:
- PU-6 FOR PIPING TO OUTLET COLLECTION WEIR, AHEAD OF FLOCULATION BASIN (50-ALUM-407-PVC-I+ET)
- PU-6 FOR PIPING TO AERATION TANKS, AHEAD OF THE OUTLET WEIRS (50-ALUM-405/406-PVC-I+ET)

FOR CONTINUATION SEE DRAWING NO. PU-15

25-POLY-605-PVC (PIPE RUNS 150mm DIRECTLY ABOVE PIPE 100-DS-306-DI TO CENTRIFUGE BUILDING)

EFFLUENT TROUGH

A PU18

B PU18

C PU18

A B C X Y

PLAN
1:50

2544PU17

NOTE

THIS DRAWING DOES NOT REPRESENT AS-BUILT CONDITIONS.

NOTE:
PIPING SHOWN HERE FOR ILLUSTRATION PURPOSES ONLY. SEE DRAWING P-9 FOR ALL CHEMICAL PIPING DETAILS.

0 1 2m

No.	Date	Revision
3	OCTOBER/95	ISSUED FOR TENDER
2	SEPT 15/95	ISSUED FOR REVIEW
1	JAN 16/95	ISSUED FOR M.O.E.E. APPROVAL

REGISTERED PROFESSIONAL ENGINEER H.A. IBRAHIM 06/16/95 PROVINCE OF ONTARIO

REGISTERED PROFESSIONAL ENGINEER D.W. LISHMAN 9-27/6/95 PROVINCE OF ONTARIO

McNEELY ENGINEERING CONSULTANTS LTD.

Owner: TOWNSHIP OF OSNABRUCK

Project: INGLESIDE SEWAGE TREATMENT PLANT
O.C.W.A. SEWAGE WORKS PROJECT No. 40-0797

Title: CHEMICAL ROOM
PLAN & SECTION

Design	W.H.	Scale	AS SHOWN	Proj. No.	M2544-4	Dwg No.
Drawn	E.C.	Check	D.W.L.	Date	SEPT 15/95	PU-18

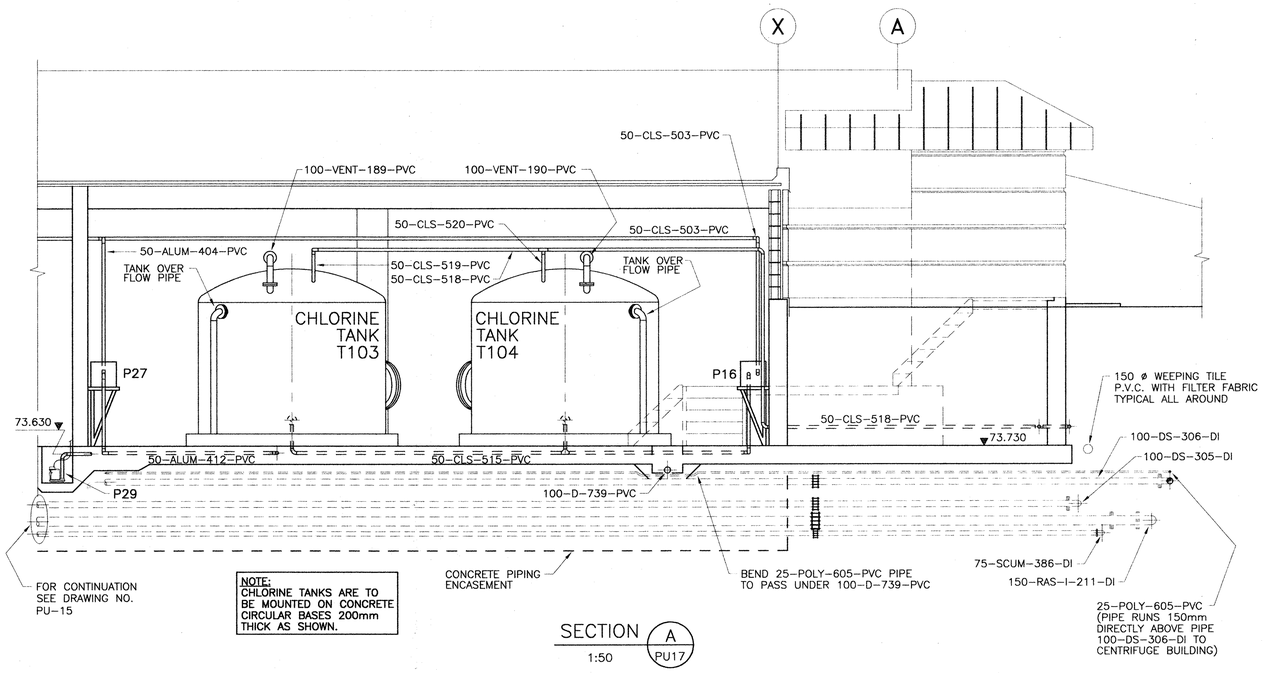

SECTION A / 1:50 / PU17

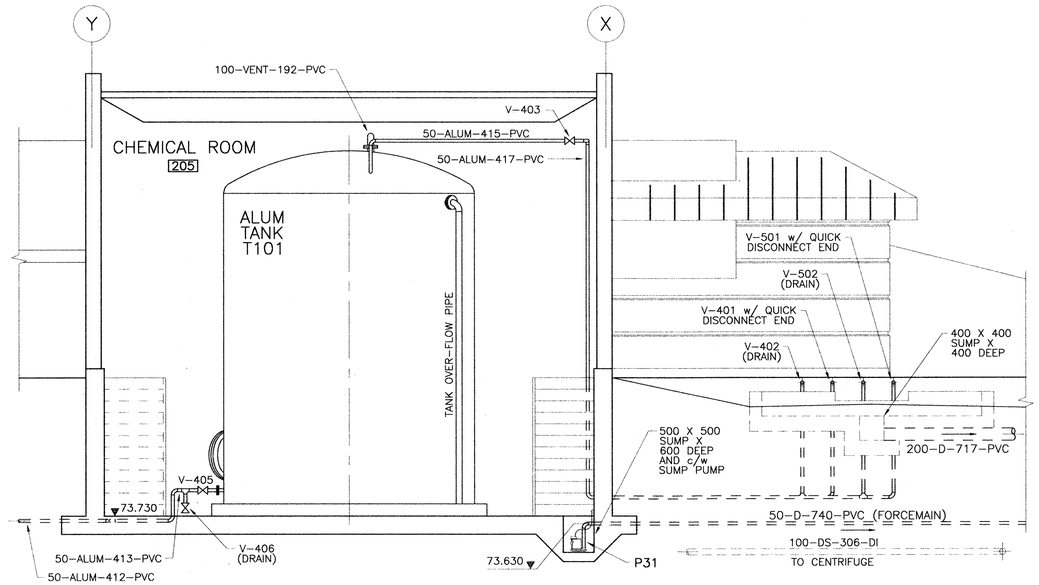

SECTION B / 1:50 / PU17

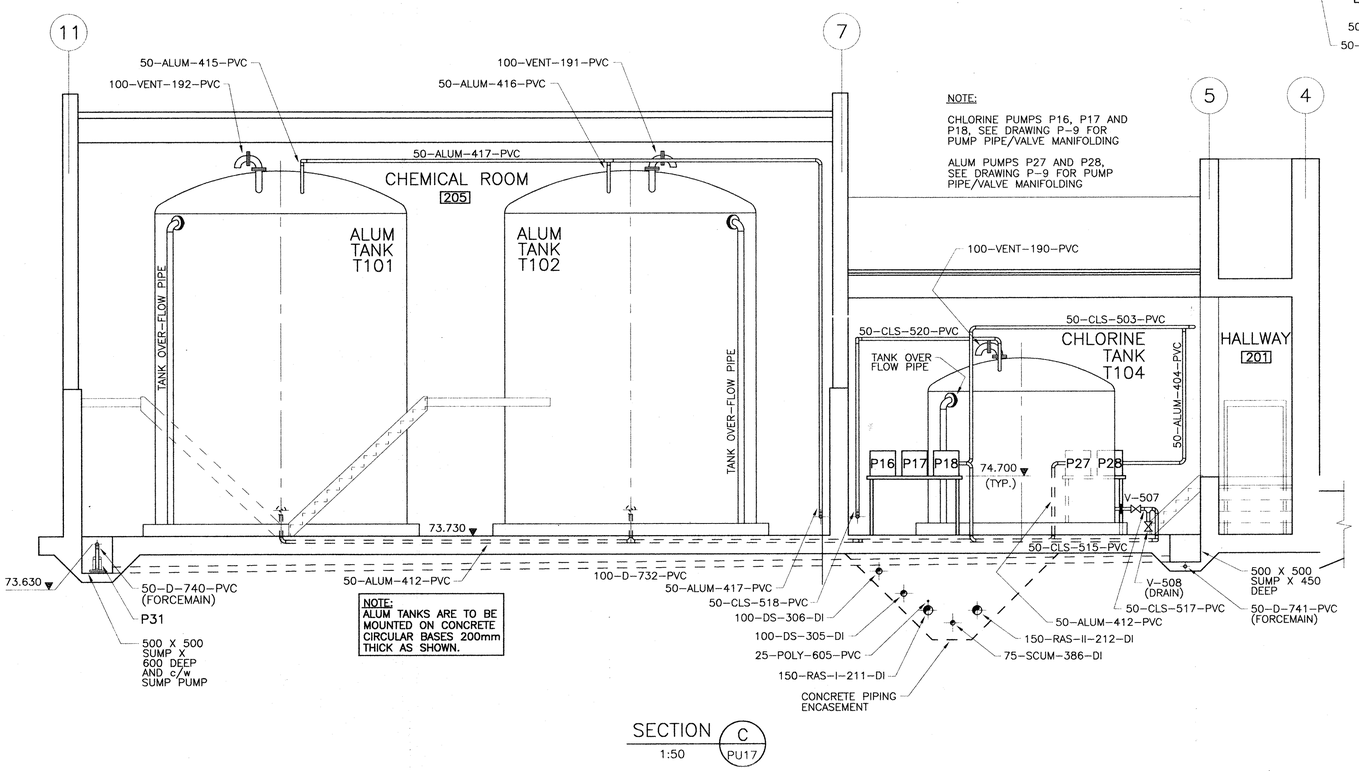

SECTION C / 1:50 / PU17

2544PU18

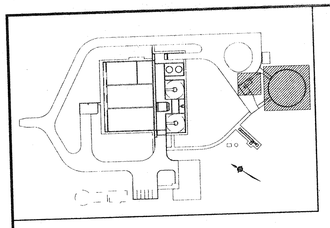

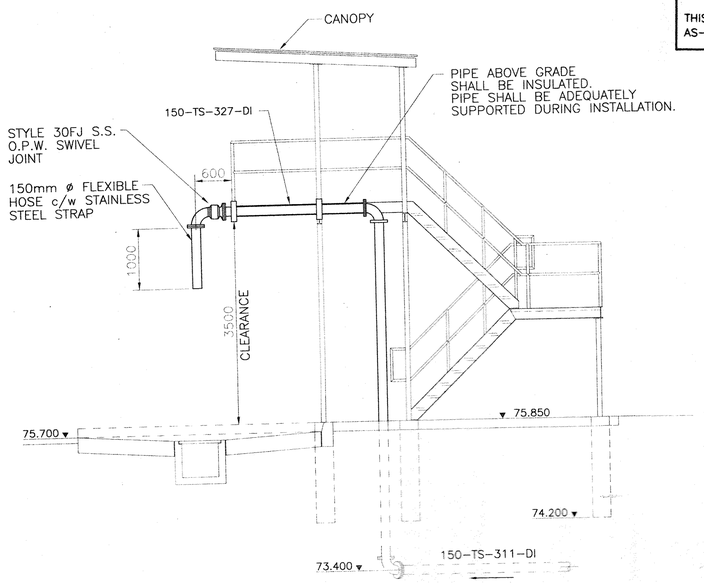

SECTION B PU19
1:50

NOTE

THIS DRAWING DOES NOT REPRESENT AS-BUILT CONDITIONS.

No.	Date	Revision
3	OCTOBER/95	ISSUED FOR TENDER
2	SEPT 15/95	ISSUED FOR REVIEW
1	JAN 16/95	ISSUED FOR M.O.E.E. APPROVAL

H.A. IBRAHIM — REGISTERED PROFESSIONAL ENGINEER — PROVINCE OF ONTARIO — 08/6/95

D.W. LISHMAN — REGISTERED PROFESSIONAL ENGINEER — PROVINCE OF ONTARIO — OCT 6/95

McNEELY ENGINEERING CONSULTANTS LTD.

Owner	TOWNSHIP OF OSNABRUCK
Project	INGLESIDE SEWAGE TREATMENT PLANT O.C.W.A. SEWAGE WORKS PROJECT No. 3-0797
Title	SLUDGE TANK/SLUDGE LOADING PLATFORM PLANS & SECTIONS

Design	H.A.I.	Scale	AS SHOWN	Proj. No.	M2544-4	Dwg No.	PU-19
Drawn	T.H.	Check	D.W.L.	Date	SEPT 15/95		

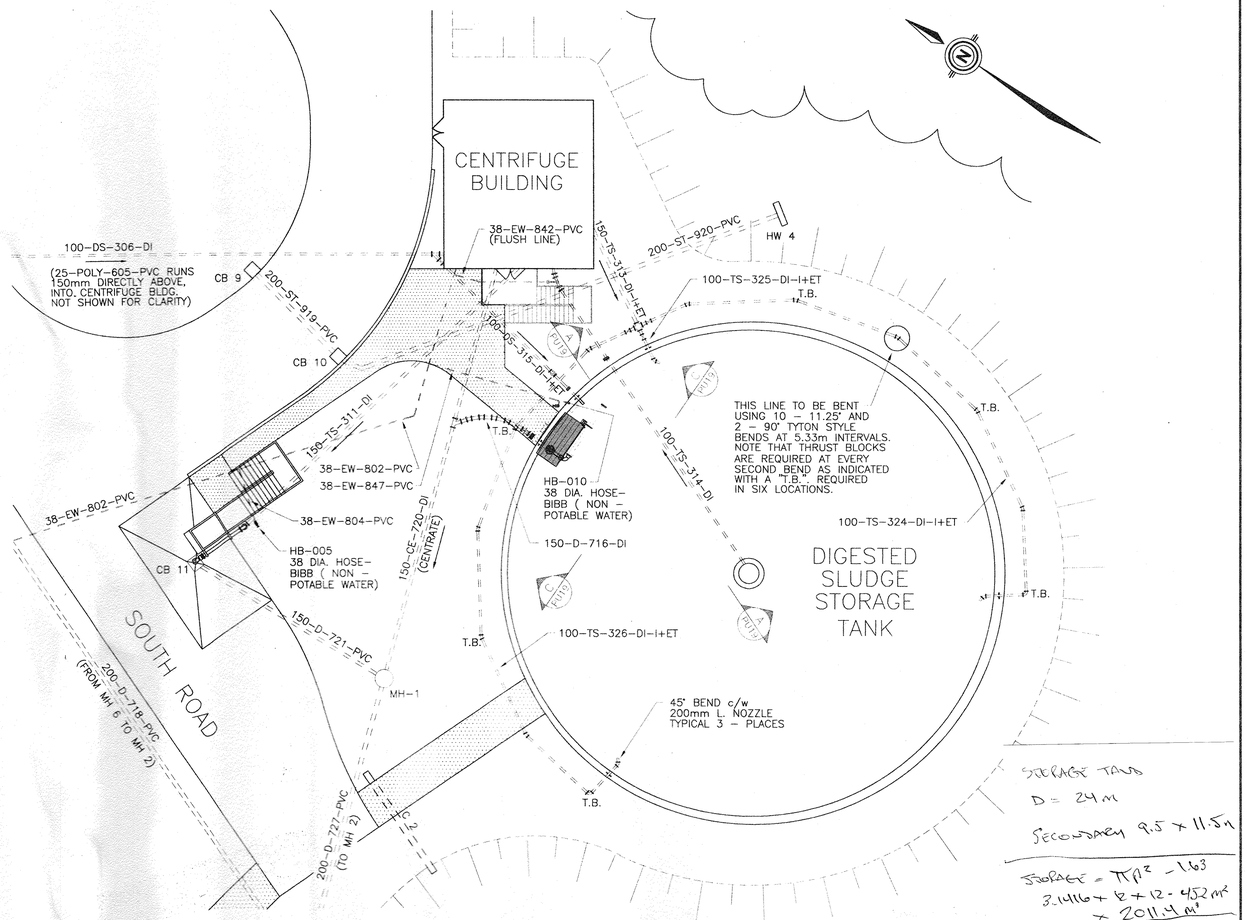

PLAN - SLUDGE STORAGE TANK

0 1.5 3m

STORAGE TANK
D = 24 m
SECONDARY 9.5 x 11.5 m
STORAGE = πR^2 - 1.63
3.1416 x 12 x 12 - 452 m²
x 2011.4 m³
SECONDARY = 109.25 m²
x 5.23 m
571.3

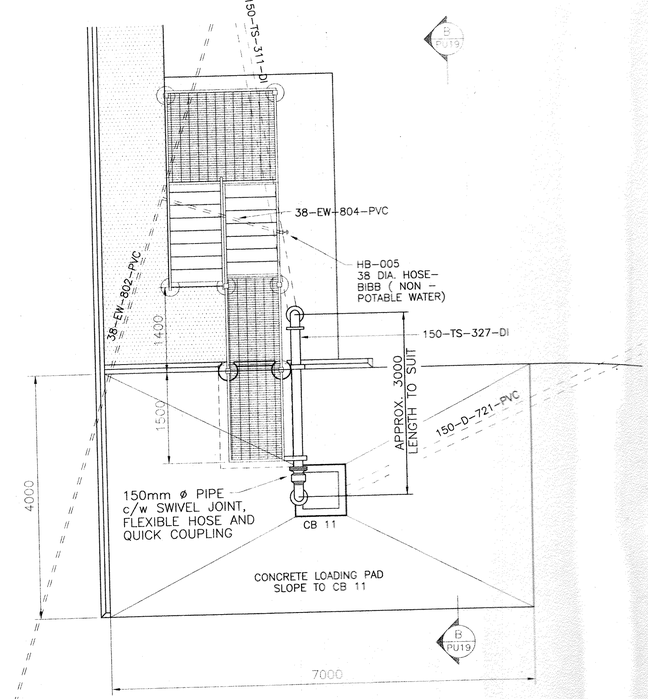

PLAN - THICKENED SLUDGE LOADING PLATFORM

0 500 1000mm

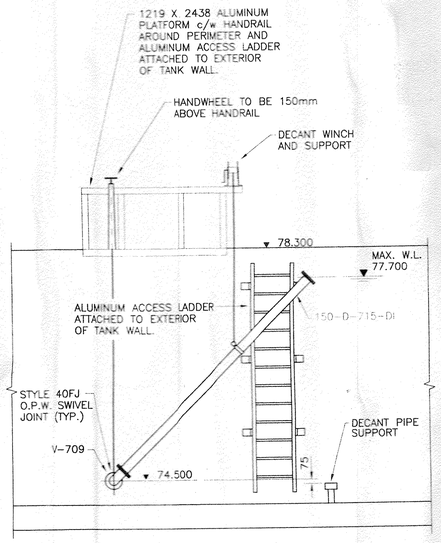

SECTION C PU19
1:50

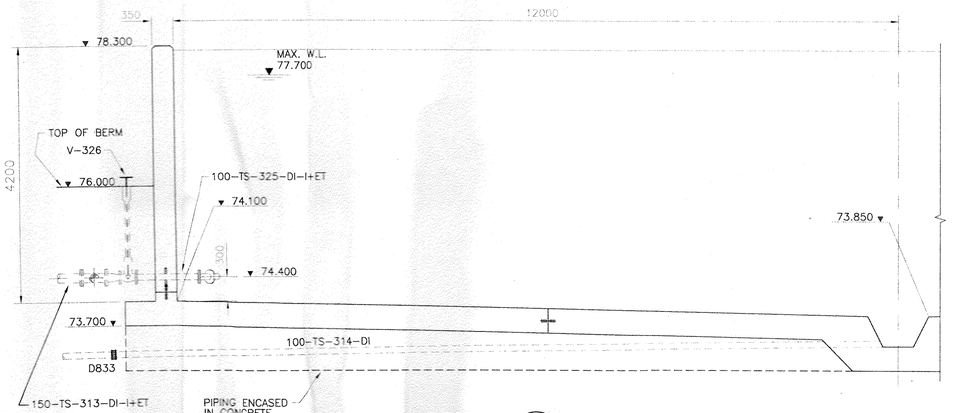

SECTION A PU19
1:50

NOTE

THIS DRAWING DOES NOT REPRESENT AS-BUILT CONDITIONS.

No.	Date	Revision
3	OCTOBER/95	ISSUED FOR TENDER
2	SEPT 15/95	ISSUED FOR REVIEW
1	JAN 16/95	ISSUED FOR M.O.E.E. APPROVAL

REG. STATED PROFESSIONAL ENGINEER H.A. IBRAHIM 06/6/95 PROVINCE OF ONTARIO

REG. STATED PROFESSIONAL ENGINEER D.W. LISHMAN 95 10 06 PROVINCE OF ONTARIO

McNEELY ENGINEERING CONSULTANTS LTD.

Owner: TOWNSHIP OF OSNABRUCK

Project: INGLESIDE SEWAGE TREATMENT PLANT
O.C.W.A. SEWAGE WORKS PROJECT No. 40-0797

Title: SLUDGE CENTRIFUGE BUILDING
PLAN, ELEVATION, SECTION, & DETAILS

Design	H.A.I.	Scale	AS SHOWN	Proj. No.	M2544-4	Dwg No.
Drawn	T.H.	Check	D.W.L.	Date	SEPT 15/95	PU-20

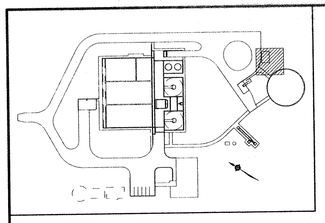

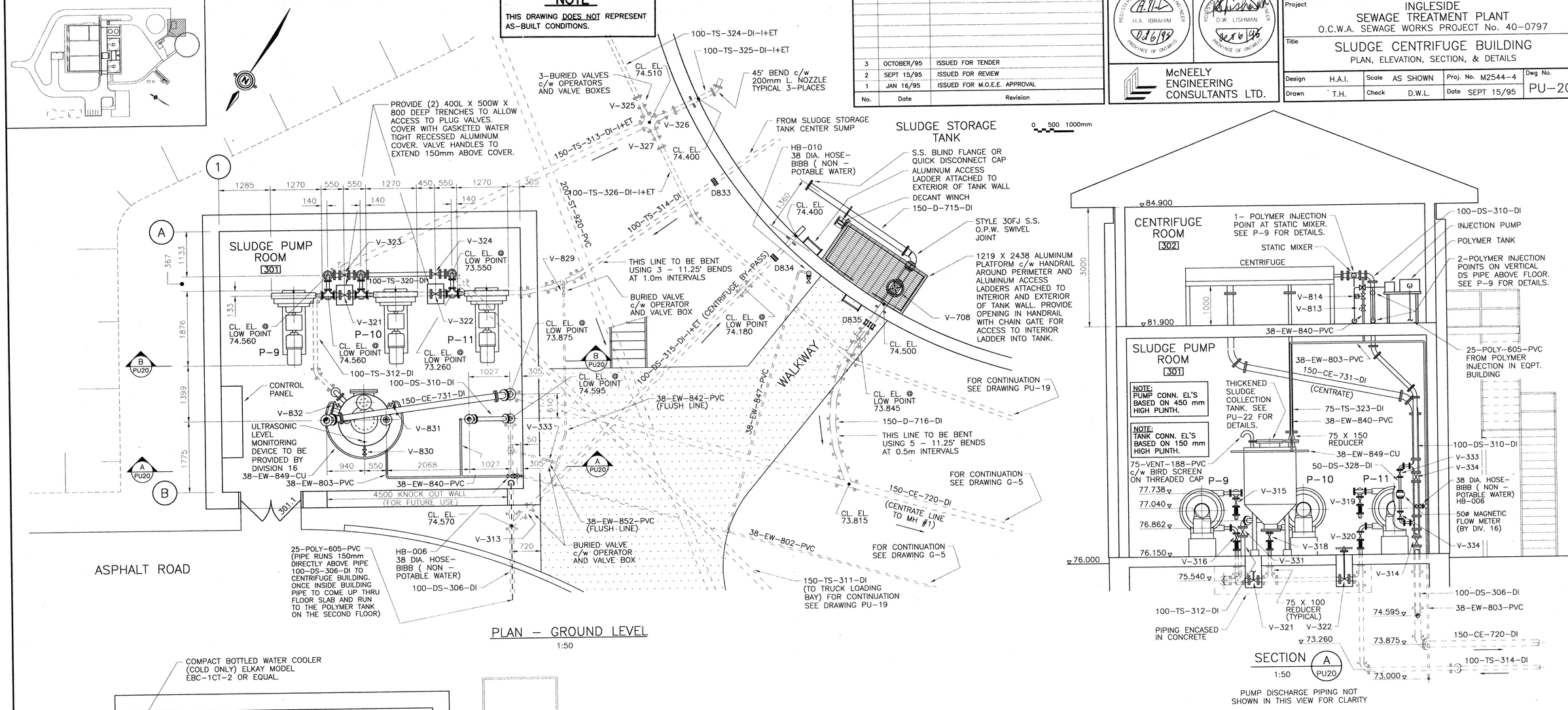

PLAN - GROUND LEVEL
1:50

PLAN - SECOND FLOOR
1:50

SECTION A PU20
1:50

SECTION B PU20
1:50

SECTION B PU20
1:50

2544PU20

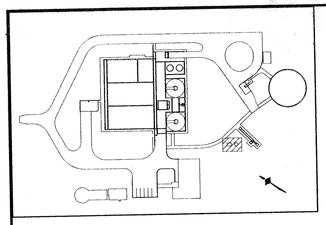

NOTE

THIS DRAWING DOES NOT REPRESENT AS-BUILT CONDITIONS.

0 .5 1m

No.	Date	Revision
3	OCTOBER/95	ISSUED FOR TENDER
2	SEPT 15/95	ISSUED FOR REVIEW
1	JAN. 16/95	ISSUED FOR M.O.E.E. APPROVAL

REGISTERED PROFESSIONAL ENGINEER H.A. IBRAHIM 92/6/95 PROVINCE OF ONTARIO

REGISTERED PROFESSIONAL ENGINEER D.W. LISHMAN 96/6/95 PROVINCE OF ONTARIO

McNEELY ENGINEERING CONSULTANTS LTD.

Owner	TOWNSHIP OF OSNABRUCK
Project	INGLESIDE SEWAGE TREATMENT PLANT O.C.W.A. SEWAGE WORKS PROJECT No. 40-0797
Title	SUBMERSIBLE PUMPING STATION PLAN, SECTION & DETAILS

Design	H.A.I.	Scale	1 : 200	Proj. No. M2544-4	Dwg No. PU-21
Drawn	G.D.V.	Check	D.W.L.	Date SEPT 15/95	

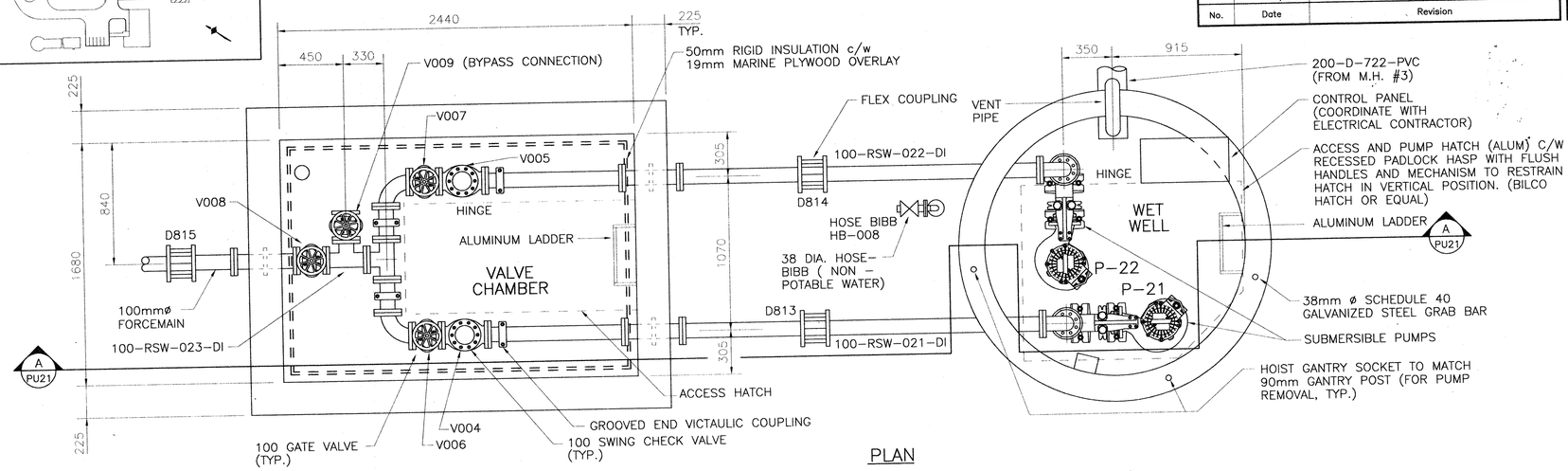

PLAN
1:20

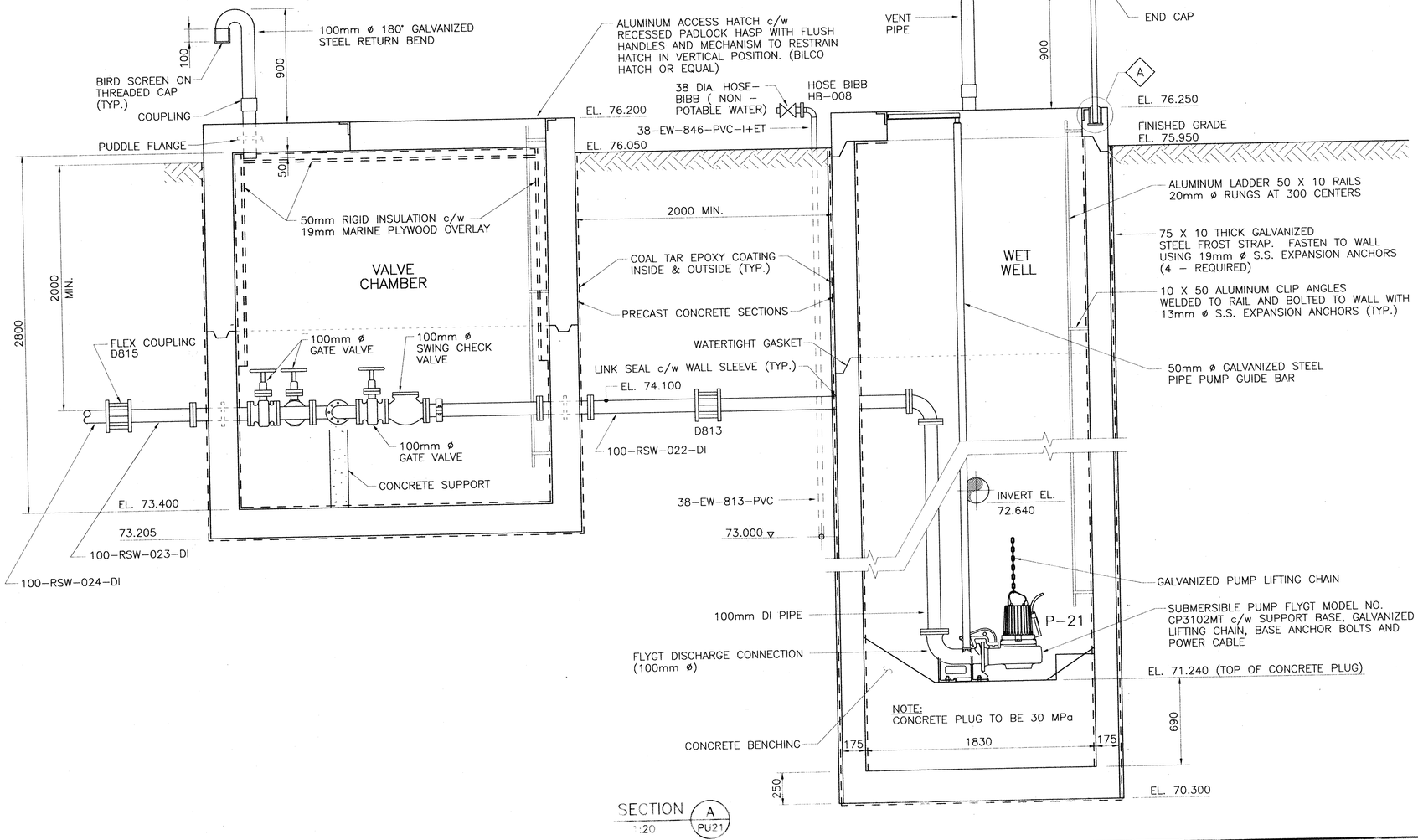

SECTION A
1:20 PU21

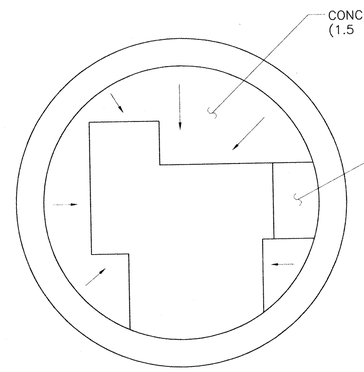

WET WELL BENCHING PLAN
1:20

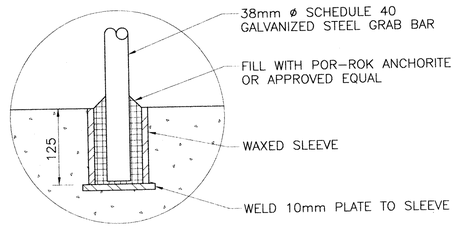

1:20

PUMPING STATION ELEVATIONS	
ELEVATION	DESCRIPTION
72.340	HIGH LEVEL ALARM
72.040	PUMP START
71.740	ALL PUMPS STOP

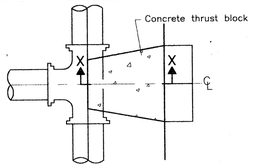

PLAN
TEE

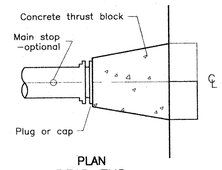

PLAN
DEAD END

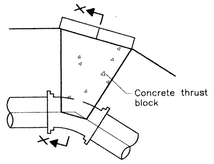

PLAN
TYPICAL BEND

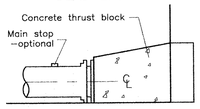

ELEVATION
DEAD END

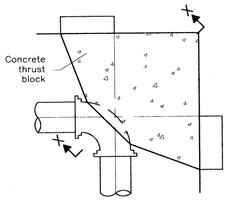

PLAN
90° BEND

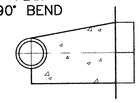

SECTION X–X

MINIMUM DIMENSIONS mm			
PIPE SIZE	a	b	c
100	150	150	150
150	250	250	200
200	250	300	200
250	350	400	250
300	450	450	300
350	500	550	400

NOTES:

A. Concrete shall be placed to within 50mm of the face of the bell.
B. Polyethylene bond breaker to be used between concrete and fittings.
C. This blocking design applies only where 1035 kPa pressure is not exceeded.
D. This blocking design applies where the soil has a minimum soil bearing capacity of 200 kPa.
E. All dimensions are in millimetres or metres unless otherwise shown.

CONCRETE THRUST BLOCKS TO BE PLACED AGAINST UNDISTURBED NATURAL SOIL

McNEELY ENGINEERING CONSULTANTS LTD.

PROJECT M4434
DATE MAR/95
DWG. No.

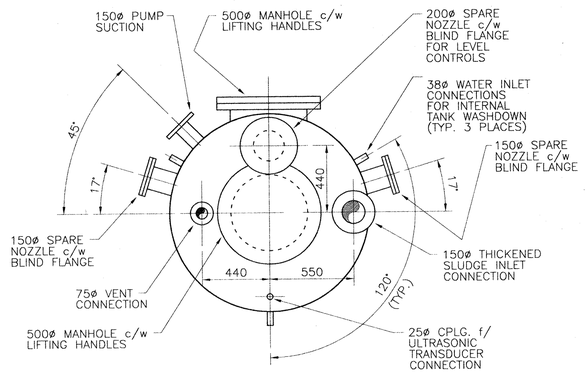

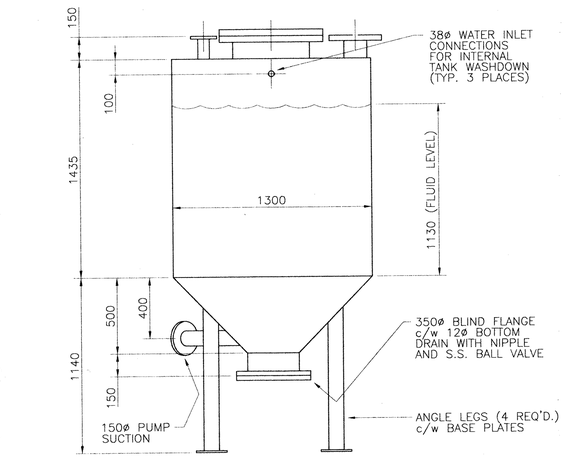

THICKENED SLUDGE COLLECTION TANK

N.T.S.

No.	Date	Revision
3	OCTOBER/95	ISSUED FOR TENDER
2	SEPT 15/95	ISSUED FOR REVIEW
1	JAN. 16/95	ISSUED FOR M.O.E.E. APPROVAL

H.A. Ibrahim 06/95 PROVINCE OF ONTARIO

D.W. Lishman 06/95 PROVINCE OF ONTARIO

McNEELY ENGINEERING CONSULTANTS LTD.

Owner	TOWNSHIP OF OSNABRUCK
Project	INGLESIDE SEWAGE TREATMENT PLANT O.C.W.A. SEWAGE WORKS PROJECT No. 40–0797
Title	MISCELLANEOUS I

Design	G.B.L.	Scale	AS SHOWN	Proj. No.	M2544–4	Dwg No.
Drawn	T.H.	Check	H.I.	Date	SEPT 15/95	PU–22

NOTE

THIS DRAWING DOES NOT REPRESENT AS–BUILT CONDITIONS.

DESIGN:	
CODE	NONE
STRESS RELIEF	NONE
RADIOGRAPHY	NONE
DESIGN PRESS.	ATMOSPHERIC
TEST PRESS.	3 PSI AIR/SOAP
MATERIAL:	
HEADS	G40.21, GR 50A
SHELL	G40.21, GR 50A
NOZZLES	SA–106B
FLANGES	SA–105
MANHOLE NECK	G40.21, GR 50A
GASKETS	7.0
BOLTING	SA–307
SUPPORTS	SA–3G

FINISH:

INSIDE – ALL SHARP CORNERS TO BE RADIUSED. ALL SURFACES TO BE GRIT BLASTED TO SSPC–SP10 AND PAINTED WITH 2 COATS OF GLIDDEN #5270/6271 COAL TAR EPOXY TO 16 MILS D.F.T.

OUTSIDE – TO BE GRIT BLASTED TO SSPC–SP6 AND PAINTED WITH 1 COAT OF EPOXY ESTER PHENOLIC GLIDDEN #5250 TO 3 MILS D.F.T.

NOTES:

1) ALL NOZZLE WELDS ARE TO BE FULL PENETRATION WELDS.
2) BOLT HOLES TO STRADDLE CENTRELINES UNLESS OTHERWISE NOTED.
3) TANK CAPACITY 2500 LITRES

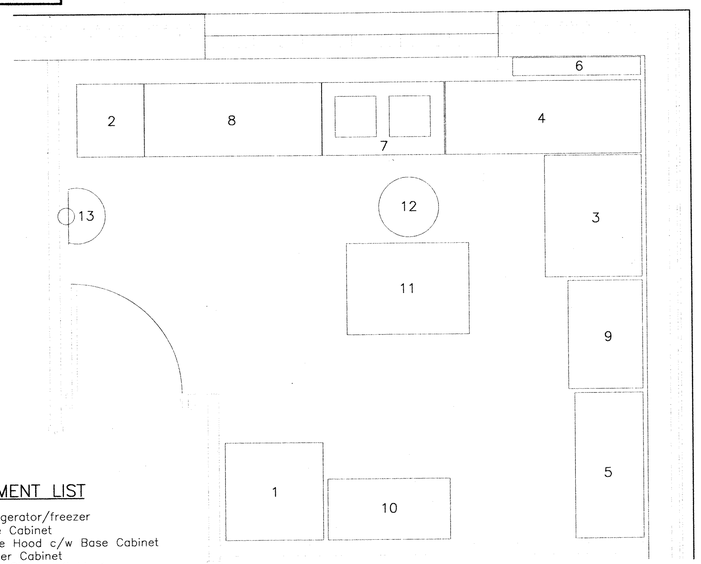

EQUIPMENT LIST

1. Refrigerator/freezer
2. Base Cabinet
3. Fume Hood c/w Base Cabinet
4. Corner Cabinet
5. Floor Storage Cabinet
6. Pegboard Drying Rack
7. Double Sink Cabinet
8. Base Cabinet
9. Balance Tablet
10. Floor Standing Cabinet
11. Laboratory Table
12. Chair
13. Eye Wash and Shower

CONTROL BUILDING – LAB LAYOUT

1:25

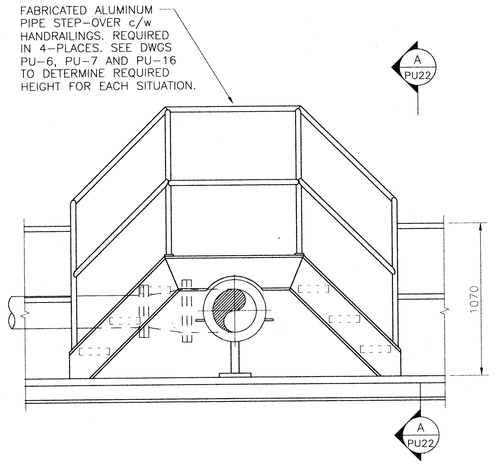

TYPICAL WALKWAY PIPE STEP–OVER

N.T.S.

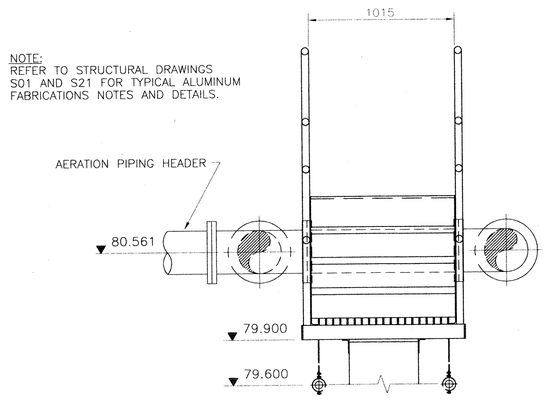

SECTION A PU22
N.T.S.

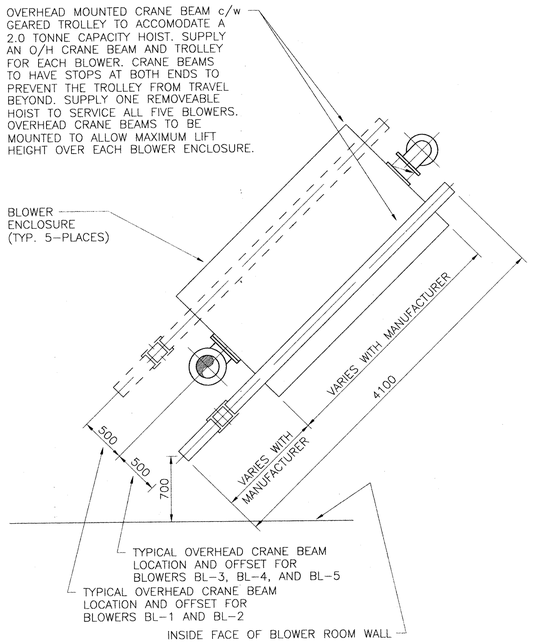

BLOWER O/H CRANE BEAM DETAIL

N.T.S.

NOTES:

1. ALL SUMPS TO BE COVERED BY RECESSED ALUMINUM GRATING.

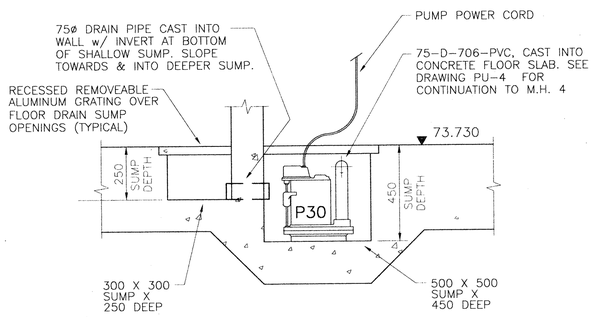

SECTION D PU15
N.T.S.

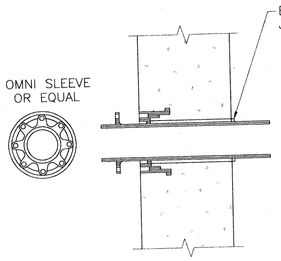

NOMINAL SIZE	C CARRIER/PIPELINE (O.D.)		S SLEEVE PIPE (O.D.)
SLEEVExCARRIER	DUCTILE IRON	STEEL	
150x100	121.9	114.3	175.3
200x150	175.3	168.3	229.9
250x200	229.9	219.1	281.9
300x250	281.9	273.0	335.3
350x300	335.3	323.8	388.6

M.J. WALL SLEEVE

N.T.S.

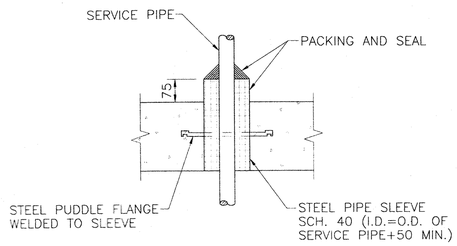

PIPE THRU CONCRETE FLOOR (TYP.)

N.T.S.

No.	Date	Revision
3	OCTOBER/95	ISSUED FOR TENDER
2	SEPT 15/95	ISSUED FOR REVIEW
1	JAN. 16/95	ISSUED FOR M.O.E.E. APPROVAL

Oct 6/95

McNEELY ENGINEERING CONSULTANTS LTD.

NOTE

THIS DRAWING DOES NOT REPRESENT AS-BUILT CONDITIONS.

Owner	TOWNSHIP OF OSNABRUCK
Project	INGLESIDE SEWAGE TREATMENT PLANT O.C.W.A. SEWAGE WORKS PROJECT No. 40-0797
Title	MISCELLANEOUS II

Design	H.A.I.	Scale	AS SHOWN	Proj. No. M2544-4	Dwg No. PU-23
Drawn	G.D.V.	Check	H.A.I.	Date SEPT 15/95	

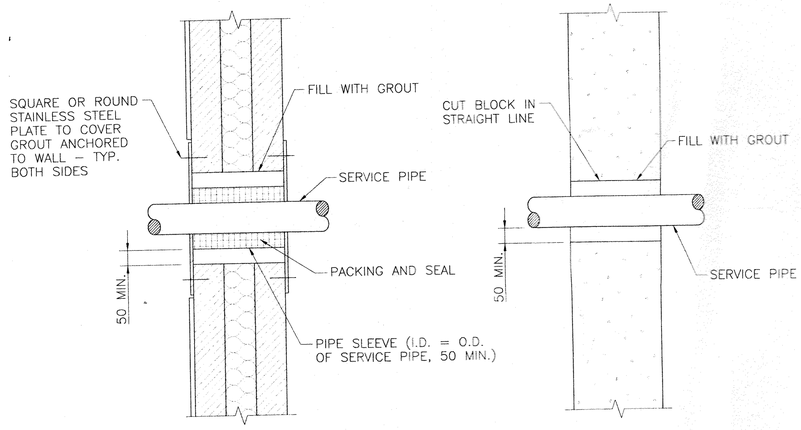

EXTERIOR WALLS

INTERIOR WALL

PIPE THRU SUPERSTRUCTURE WALL

N.T.S.

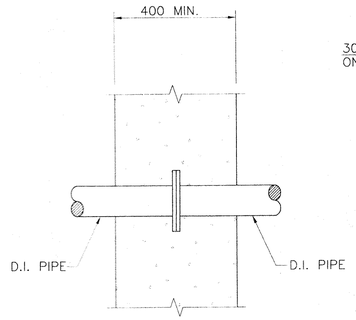

FLANGE TO FLANGE COUPLING

INTERIOR/EXTERIOR WALL

1. STAINLESS STEEL PIPE WILL HAVE:
   a) S.S. FLANGES ON S.S. SLEEVE
2. DUCTILE IRON PIPE WILL HAVE:
   a) BACK TO BACK D.I. FLANGES FOR WALLS ≥ 400mm THICK.
   b) S.S. PIPE WITH S.S. PUDDLE FLANGES FOR WALLS < 400mm THICK.

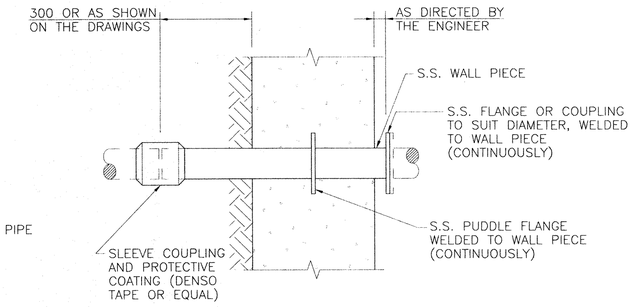

EXTERIOR WALL

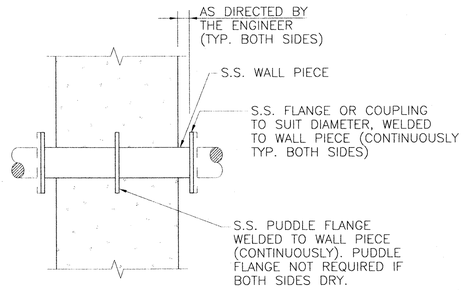

INTERIOR WALL

PIPE CAST IN CONCRETE WALL (TYP.)

N.T.S.

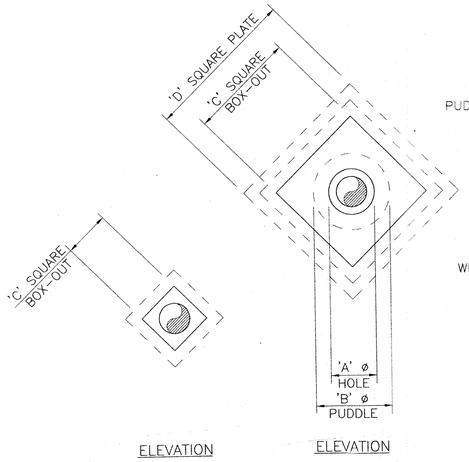

ELEVATION

INTERIOR WALL

ELEVATION

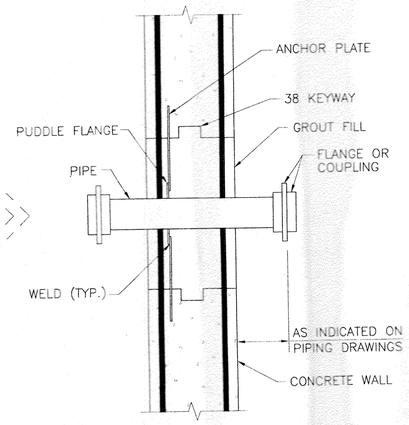

SECTION

EXTERIOR WALL

SCHEDULE					
PIPE ø	EXTERIOR WALL				INTERIOR WALL
	'A'	'B'	'C'	'D'	(BOTH SIDES DRY)
25 % LESS	75	125	225	375	150
50	100	150	250	400	250
75	125	175	275	425	275
100	150	200	300	450	300
150	200	300	400	550	350
200	250	350	450	600	400
250	300	400	500	650	475
300	350	450	550	700	550
350	400	500	600	750	600
400	450	550	650	800	675
450	500	600	700	850	700
500	550	650	750	900	800
600	650	750	850	1000	900
750	800	900	1000	1150	1050
900	950	1050	1150	1300	1200
1050	1100	1200	1300	1450	1350
1200	1250	1350	1450	1600	1500

NOTES: STEEL PIPE THRU WALL
- SEE FORMWORK DETAIL FOR INSTALLATION PROCEDURE.
- FOR PIPE THRU WALL WHERE ONE SIDE IS WET, USE SAME DETAIL AS EXTERIOR WALL WITH ONE END OF PIPE FLANGED AND THE OTHER WELDED/THREADED/VAN STONE FLANGE.
- ALL DIMENSIONS ARE IN MILLIMETERS.

PIPE THRU CONCRETE WALL

N.T.S.

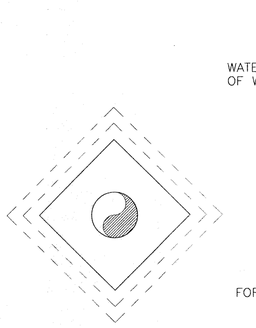

ELEVATION

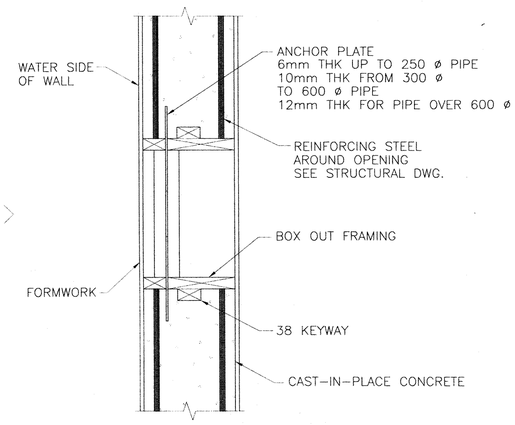

SECTION

FORMWORK

CONSTRUCTION PROCEDURE:
- ERECT INSIDE (OUTSIDE) WALL FORMWORK.
- INSTALL REINFORCING STEEL.
- ATTACH PREFORMED METAL PLATE & BOX OUT FRAME TO WALL FORMWORK, DEFLECTING ONLY THE ACTUAL PIPE LOCATION.
- ERECT OUTSIDE (INSIDE) WALL FORMWORK & TIGHTEN SNAP TIES.
- PLACE CONCRETE.
- STRIP FORMWORK & BOX-OUT.
- INSTALL PIPE THRU WALL & WELD PUDDLE FLANGE TO ANCHOR PLATE.
- FILL WITH NON-SHRINK, NON-METALLIC GROUT.

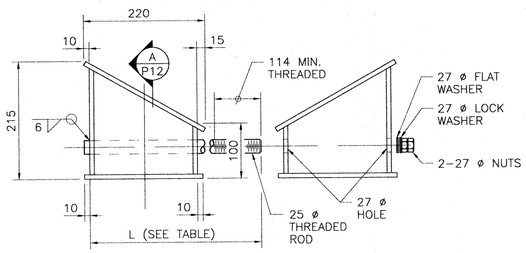

THREADED ROD LENGTH	
VALVE	L
200	515
300	595
350	610
400	625
500	640
600	670
750	730
900	800
1050	860
1200	920
1500	1060

ELEVATION

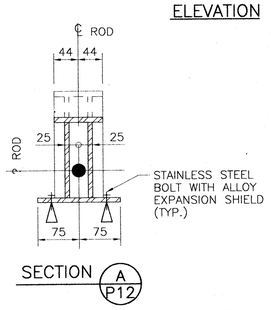

SECTION A P12

VALVE SUPPORT NOTES;
1. FABRICATED VALVE SUPPORT FROM 10TH STEEL PLATE
2. WELDS AT ALL INTERSECTING JOINTS TO BE 6 FILLET
3. ASSEMBLY TO BE HOT DIP GALVANIZED AFTER FABRICATION
4. PROVIDE A STAMPED DETAILED DRAWING FOR EACH INDIVIDUAL VALVE SUPPORT

VALVE SUPPORT
(PS-1)

PIPE SUPPORT NOTES;
1. PROVIDE ADEQUATE PIPE AND VALVE SUPPORTS
2. SUBMIT ACCURATE WEIGHT BALANCE CALCULATIONS, TO BE PREPARED AND STAMPED BY THE MANUFACTURER. ALL CALCULATIONS SHALL BE STAMPED BY A PROFESSIONAL ENGINEER. HORIZONTAL SPACING BETWEEN PIPE SUPPORTS SHALL NOT EXCEED THE MANUFACTURERS RECOMMENDATIONS.
3. TOTAL NUMBER OF SUPPORTS SHALL BE DETERMINED BASED ON THE WEIGHT BALANCE CALCULATIONS.

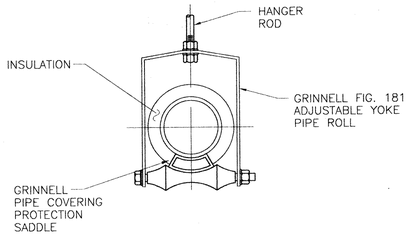

ROLLER HANGER
(PS-13)

FOR USE ON MILD STEEL PIPES ONLY

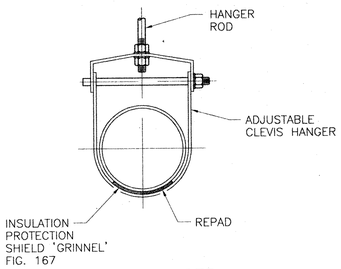

CLEVIS HANGER
(PS-2)

'GRINNELL' FIG. 260, FIG. 300 OR APPROVED EQUIVALENT

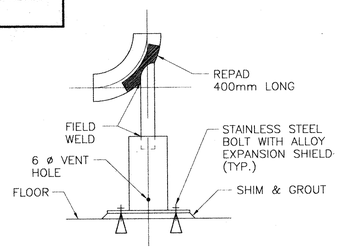

ELBOW STANCHION
(PS-3)

'GRINNELL' FIG. 62 OR APPROVED EQUIVALENT

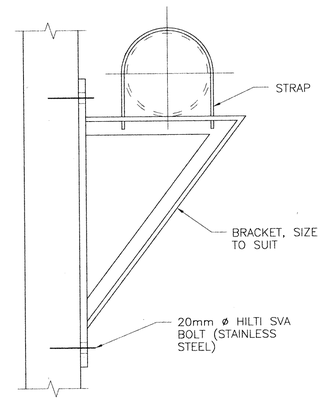

TYPICAL BRACKET
(PS-4)

'GRINNELL' FIG. 199 OR APPROVED EQUIVALENT

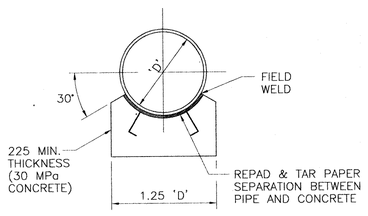

TYPICAL CONCRETE SADDLE
(PS-6)

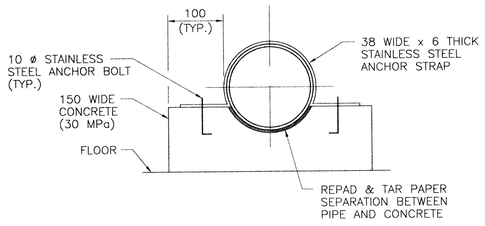

PIPE SUPPORT
(PS-5)

STEEL PIPE (STANDARD WEIGHT)	
NOMINAL PIPE SIZE (mm)	MAXIMUM SPAN (M)
12.7 [1/2"]	2.1
19.0 [3/4"]	2.1
25.0 [1"]	2.1
38.0 [1 1/2"]	2.7
50.0 [2"]	3.0
63.5 [2 1/2"]	3.3
75.0 [3"]	3.6
100.0 [4"]	4.2
125.0 [5"]	4.8
150.0 [6"]	5.2
200.0 [8"]	5.8
250.0 [10"]	6.7
300.0 [12"]	7.0
350.0 [14"]	7.6
400.0 [16"]	8.2
450.0 [18"]	8.5
500.0 [20"]	9.1
600.0 [24"]	9.7

MAXIMUM HORIZONTAL SPACING BETWEEN PIPE SUPPORTS FOR STANDARD WEIGHT STEEL PIPE

PVC PIPE (SCH. 40 @ 100° F.)	
NOMINAL PIPE SIZE (mm)	MAXIMUM SPAN (M)
12.7 [1/2"]	1.22
19.0 [3/4"]	1.22
25.0 [1"]	1.37
38.0 [1 1/2"]	1.52
50.0 [2"]	1.52
63.5 [2 1/2"]	1.83
75.0 [3"]	1.83
100.0 [4"]	1.98
125.0 [5"]	2.13
150.0 [6"]	2.29
200.0 [8"]	2.44
250.0 [10"]	2.59
300.0 [12"]	2.90
350.0 [14"]	3.05
400.0 [16"]	3.20
450.0 [18"]	3.35
500.0 [20"]	3.51
600.0 [24"]	3.66

MAXIMUM HORIZONTAL SPACING BETWEEN PIPE SUPPORTS FOR SCH. 40 PVC PIPE @ 100° F.

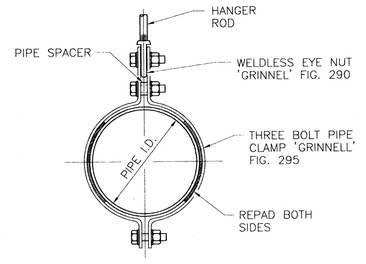

THREE BOLT PIPE HANGER
(PS-9)

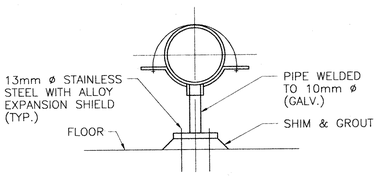

PIPE SUPPORT
(PS-8)

'GRINNELL' FIG. 259 OR APPROVED EQUIVALENT

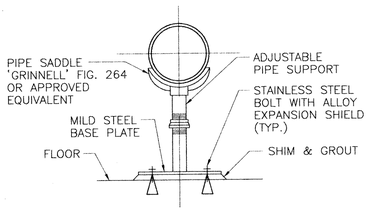

ADJUSTABLE PIPE SUPPORT
(PS-11)

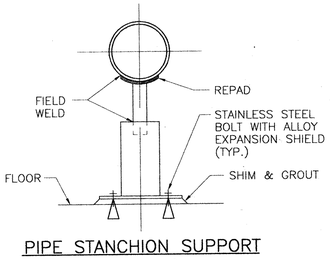

PIPE STANCHION SUPPORT
(PS-10)

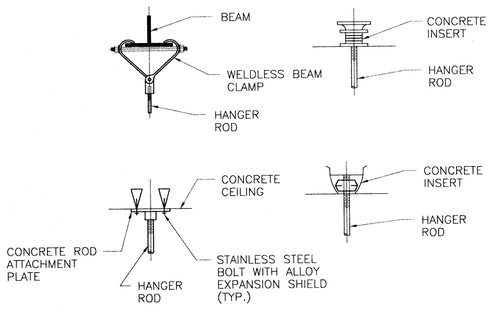

CEILING MOUNTED

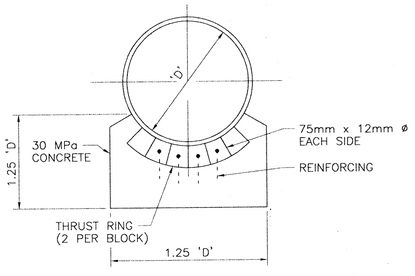

THRUST BLOCK DETAIL
(PS-7)

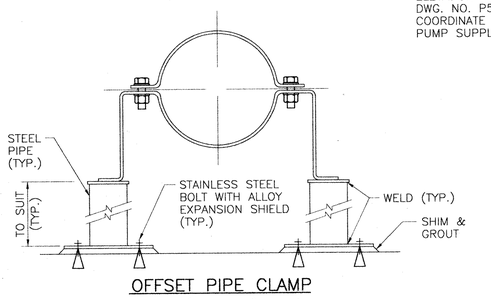

OFFSET PIPE CLAMP
(PS-12)

'GRINNELL' FIG. 103 OR APPROVED EQUIVALENT

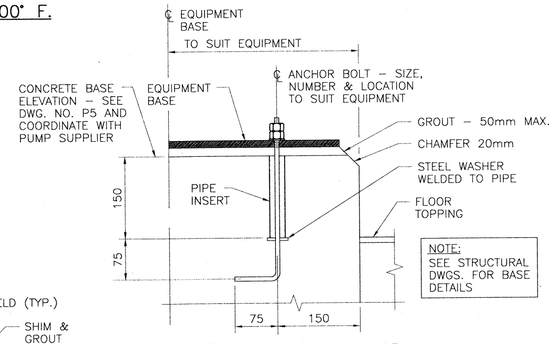

EQUIPMENT BASE – ANCHOR BOLT & GROUTING DETAILS

No.	Date	Revision
3	OCTOBER/95	ISSUED FOR TENDER
2	SEPT 15/95	ISSUED FOR REVIEW
1	JAN. 16/95	ISSUED FOR M.O.E.E. APPROVAL

REGISTERED PROFESSIONAL ENGINEER H.A. Ibrahim 06/95 PROVINCE OF ONTARIO

REGISTERED PROFESSIONAL ENGINEER D.W. Lishman 06/95 PROVINCE OF ONTARIO

McNEELY ENGINEERING CONSULTANTS LTD.

NOTE

THIS DRAWING DOES NOT REPRESENT AS-BUILT CONDITIONS.

Owner	TOWNSHIP OF OSNABRUCK
Project	INGLESIDE SEWAGE TREATMENT PLANT O.C.W.A. SEWAGE WORKS PROJECT No. 40-0797
Title	PROCESS PIPING SUPPORT DETAILS

Design	H.A.I.	Scale	AS SHOWN	Proj. No.	M2544-4
Drawn	D.M.R.	Check	H.A.I.	Date	SEPT 15/95

Dwg No. PU-24

PIPES

LINE #	DIA.(mm)	MATERIAL	SERVICE	TRACING & INSUL.	LENGTH	REF.DWG. P#	REF.DWG. PU#	COMMENTS
001	400	DI	RSW	---	89.0	4	1	4E,2FC
002	400	DI	RSW	I+ET	10.6	4	1	2E,4FC
003	300	DI	RSW	I+ET	3.8	4	1	2E,4FC
004	350	DI	RSW	I+ET	3.8	4	2	1T,1C,4FC
005	350	DI	RSW	---	7.6	4	2	2E,4FC
006	350	DI	RSW	---	4.7	5	5	1E,5FC
007	350	DI	RSW	I+ET	2.6	5	5	1E,3FC
008	350	DI	RSW	---	4.7	5	5	1E,5FC
009	250	DI	RSW	---	2.8	5	5	1E,2FC
010	250	DI	RSW	---	2.8	5	5	1E,2FC
011	600	DI	AS	---	2.8	6	15	1E,1RED,3FC
012	600	DI	AS	---	2.8	6	15	1E,1RED,4FC
013	450	DI	AS	---	1.1	6	15	1RED,2FC
014	450	DI	AS	---	1.1	6	15	1RED,2FC
015	300	DI	AS	---	4.4	6	15	1E,2FC
016	300	DI	AS	---	4.4	6	15	1E,2FC
017	300	DI	AS	---	7.2	5	12	1E,1Y,4FC
018	300	DI	AS	---	7.2	5	12	1E,1Y,4FC
019	300	DI	AS	---	8.6	5	12	1E,4FC
020	300	DI	AS	---	8.6	5	12	1E,3FC
021	100	DI	RSW	---	5.2	10	21	1E,3FC
022	100	DI	RSW	---	5.2	10	21	1E,6FC
023	100	DI	RSW	---	2.6	10	21	11FC,2T
024	100	DI	RSW	---	118.0	10	4	2E,3FC
025	100	DI	RSW	I+ET	8.5	6	2	3E,7FC
026	350	DI	RSW	---	3.6	5	5	1E,1FC
027	350	DI	RSW	---	3.6	5	5	1E,1FC
028	50	DI	RSW	I+ET	0.3	4	2	1E,2FC
029	50	DI	RSW	I+ET	3.0	4	2	1E,3FC
101	200	SS	AA	---	1.5	8	16	1E,3FC
102	200	SS	AA	---	1.5	8	16	1E,3FC
103	200	SS	AA	---	1.5	8	16	1E,3FC
104	200	SS	AA	---	1.5	8	16	1E,3FC
105	200	SS	AA	---	1.5	8	16	1E,3FC
106	250	SS	AA	---	8.1	8	16	3E,8FC
107	250	SS	AA	---	6.8	8	16	3E,8FC
108	250	SS	AA	---	4.9	8	16	3E,8FC
109	250	SS	AA	---	3.2	8	16	1E,4FC
110	250	SS	AA	---	3.2	8	16	1E,4FC
111	400	SS	AA	---	46.8	8	16	2E,4T,1RED,13FC
112	300	SS	AA	---	3.5	8	16	1T,1RED,3FC
113	250	SS	AA	---	34.0	8	16	3E,4T,2RED,20FC
114	200	SS	AA	---	5.2	7	9	1FC
115	300	SS	AA	---	5.2	7	9	1FC
116	200	SS	AA	---	6.7	5	6	1T,1RED,4FC
117	200	SS	AA	---	6.7	5	6	1T,1RED,4FC
118	150	SS	AA	---	14.8	5	6	1T,1RED,4FC
119	150	SS	AA	---	14.8	5	6	1T,1RED,4FC
120	100	SS	AA	---	16.3	5	6	3E,6FC
121	100	SS	AA	---	16.3	5	6	3E,6FC

PIPES

LINE #	DIA.(mm)	MATERIAL	SERVICE	TRACING & INSUL.	LENGTH	REF.DWG. P#	REF.DWG. PU#	COMMENTS
122	100	SS	AA	---	5.3	5	6	1FC
123	100	SS	AA	---	5.3	5	6	1FC
124	100	SS	AA	---	5.3	5	6	1FC
125	100	SS	AA	---	5.3	5	6	1FC
126	38	SS	AA	---	0.5	5	6	1E
127	38	SS	AA	---	0.5	5	6	1E
128	38	SS	AA	---	0.5	5	6	1E
129	38	SS	RA	---	0.5	5	6	1E
130	38	SS	AA	---	0.5	5	6	1E
131	38	SS	AA	---	0.4	5	6	---
132	38	SS	AA	---	0.4	5	6	---
133	38	SS	AA	---	0.4	5	6	---
134	38	SS	AA	---	0.4	5	6	---
135	38	SS	AA	---	0.6	7	8	1E
136	38	SS	AA	---	0.5	7	8	---
137	38	SS	RA	---	0.5	7	8	---
176	50	PVC	AR	---	1.5	4	1	2E
177	50	PVC	VENT	---	3.5	4	1	4E
178	50	PVC	VENT	---	1.4	4	1	2E
179	75	PVC	VENT	---	2.8	4	1	2E
180	75	PVC	VENT	---	5.9	4	1	2E,1RED,2T
181	50	PVC	VENT	---	2.8	4	1	3E
182	150	PVC	VENT	---	0.5	5	4	1U,1BC
183	150	PVC	VENT	---	2.0	4	1	1E,1T,2RED
184	150	PVC	VENT	---	0.5	4	2	1U,1BC
185	150	PVC	VENT	---	2.8	5	4	2E,1T
186	50	PVC	VENT	---	6.5	4	1	2E,1T
187	150	PVC	VENT	---	15.5	5	5	1E
188	75	PVC	VENT	---	0.5	9	20	1E,1FC
189	100	PVC	VENT	---	0.5	9	20	1E,1FC
190	100	PVC	VENT	---	0.5	9	20	1E,1FC
191	100	PVC	VENT	---	0.5	9	20	1E,1FC
192	100	PVC	VENT	---	0.5	9	20	1E,1FC
201	200	DI	RAS	---	11.5	10	15	2E,2T,7FC
202	100	DI	RAS	---	1.7	10	16	1E,4FC
203	100	DI	RAS	---	1.7	10	16	1E,4FC
204	100	DI	RAS	---	1.7	10	16	1E,4FC
205	100	DI	RAS	---	1.1	10	16	3FC,1RED
206	100	DI	RAS	---	1.1	10	16	3FC,1RED
207	100	DI	RAS	---	1.1	10	16	3FC,1RED
208	200	DI	RAS	---	2.9	10	16	2E,3T,10FC
209	150	DI	RAS	---	3.1	10	16	1E,2FC
210	150	DI	RAS	---	3.1	10	16	1E,2FC
211	150	DI	RAS	---	115.2	10	15	4E,2T,12FC
212	150	DI	RAS	---	129.9	10	15	4E,2T,12FC
213	150	DI	RAS	I+ET	11.3	5	5	1E,6FC
214	150	DI	RAS	I+ET	10.7	5	5	1E,6FC

LEGEND

E	ELBOW
T	TEE
Y	WYE
RED	REDUCER
FC	FLANGED CONNECTION
SJ	SWIVEL JOINT
C	CROSS

NOTE

THIS DRAWING DOES NOT REPRESENT AS-BUILT CONDITIONS.

No.	Date	Revision
3	OCTOBER/95	ISSUED FOR TENDER
2	SEPT 15/95	ISSUED FOR REVIEW
1	JAN. 16/95	ISSUED FOR M.O.E.E. APPROVAL

REGISTERED PROFESSIONAL ENGINEER — H.A. Ibrahim — 06/96/99 — PROVINCE OF ONTARIO

REGISTERED PROFESSIONAL ENGINEER — D.W. Lishman — 06/96/95 — PROVINCE OF ONTARIO

McNEELY ENGINEERING CONSULTANTS LTD.

Owner: TOWNSHIP OF OSNABRUCK

Project: INGLESIDE SEWAGE TREATMENT PLANT
O.C.W.A. SEWAGE WORKS PROJECT No. 40-0797

Title: PIPES, VALVES & GATES – SCHEDULE I

Design	H.A.I.	Scale	N/A	Proj. No.	2544-4	Dwg No.
Drawn	T.H.	Check	H.A.I.	Date	SEPT 15/95	PU-25

NOTE: QUANTITIES AND LENGTHS LISTED ARE APPROXIMATE. THE CONTRACTOR SHALL BE RESPONSIBLE FOR SUPPLYING AND INSTALLING ALL PIPES AND VALVES REQUIRED FOR THE PLANT OPERATION. PIPES AND VALVES THAT ARE PART OF THE EQUIPMENT PACKAGE MIGHT NOT BE INCLUDED HEREWITH.

PIPES

LINE #	DIA.(mm)	MATERIAL	SERVICE	TRACING & INSUL.	LENGTH	REF.DWG. P#	REF.DWG. PU#	COMMENTS
215	150	DI	RAS	---	3.2	5	5	1E,1FC
216	150	DI	RAS	---	3.2	5	5	1E,1FC
217	---	---	---	---	---	-	-	---
218	---	---	---	---	---	-	-	---
219	200	DI	RAS	---	11.5	10	15	2E,1T,7FC
251	100	DI	WAS	I+ET	9.9	7	8	3E,8FC
252	100	DI	WAS	I+ET	9.9	7	8	3E,8FC
253	100	DI	WAS	I+ET	8.7	7	8	3E,8FC
254	100	DI	WAS	I+ET	8.7	7	8	3E,8FC
255	100	DI	WAS	I+ET	5.4	7	8	1E,3FC
256	100	DI	WAS	I+ET	5.4	7	8	1E,3FC
257	100	DI	WAS	I+ET	5.4	7	8	1E,3FC
258	100	DI	WAS	I+ET	5.4	7	8	1E,3FC
301	100	DI	DS	---	8.6	7	8	2E,10FC
302	100	DI	DS	---	7.0	7	8	2E,9FC
303	100	DI	DS	---	4.2	7	8	1E,3FC
304	100	DI	DS	---	4.2	7	8	1E,3FC
305	100	DI	DS	---	24.8	7	8	3E,1T,7FC
306	100	DI	DS	---	91.2	7	8	4E,1T,1Y,10FC
307	100	DI	DS	---	2.0	7	15	1E,1T,6FC
308	100	DI	DS	---	1.6	7	15	1E,5FC
309	100	DI	DS	---	1.6	7	15	1E,5FC
310	100	DI	DS	---	10.0	7	20	3E,14FC,2T
311	150	DI	TS	---	21.5	7	20	1E,1RED,3FC
312	75	DI	TS	---	8.1	7	20	4E,13FC,2T
313	75	DI	TS	I+ET	8.7	7	20	1C,3RED,9FC
314	150	DI	TS	---	22.2	7	20	4E,8FC
315	100	DI	DS	I+ET	10.0	7	20	2FC
316	150	DI	TS	---	3.8	7	20	3E,1T,2RED,8FC
317	75	DI	TS	---	1.6	7	20	2E,5FC,1RED
318	75	DI	TS	---	2.8	7	20	2E,5FC,1RED
319	75	DI	TS	---	1.3	7	20	1E,1RED,5FC
320	150	DI	TS	---	3.1	7	19	1T,6FC
321	75	DI	TS	---	6.9	7	20	3E,1T,2RED,8FC
322	150	DI	RSD	---	12.0	7	20	1E,5FC,1RED
323	75	DI	TS	---	3.7	7	20	1RED,3FC
324	100	DI	TS	---	30.4	7	20	7E,17FC
325	100	DI	TS	---	2.0	7	20	1E,5FC
326	100	DI	TS	---	30.2	7	20	7E,17FC

PIPES

LINE #	DIA.(mm)	MATERIAL	SERVICE	TRACING & INSUL.	LENGTH	REF.DWG. P#	REF.DWG. PU#	COMMENTS
327	150	DI	TS	---	9.6	7	19	2E,1SJ,5FC
328	50	DI	DS	---	1.0	7	20	2E,2RED,6FC
376	---	---	---	---	---	--	--	---
377	75	DI	SR	---	5.0	6	12	1E,4FC
378	75	DI	SCUM	---	4.4	6	12	1E,2T,6FC
379	75	DI	SCUM	---	5.2	6	12	1E,1T,5FC
380	---	---	---	---	---	--	--	---
381	---	---	---	---	---	--	--	---
382	75	DI	SCUM	---	6.9	6	16	1E,6FC
383	150	DI	SCUM	---	1.8	6	12	1E,1FC
384	150	DI	SCUM	---	1.8	6	12	1E,1FC
385	150	DI	SCUM	---	3.2	6	12	1E,2FC
386	75	DI	SCUM	---	54.9	7	8	3E,1T,8FC
387	75	DI	SCUM	I+ET	9.3	7	8	3E,8FC
388	75	DI	SCUM	I+ET	9.3	7	8	3E,8FC
389	75	DI	SCUM	I+ET	5.4	7	8	1E,3FC
390	75	DI	SCUM	I+ET	5.4	7	8	1E,3FC
400	25	PVC	ALUM	---	---	9	17	FIELD RUN
401	25	PVC	ALUM	---	---	9	17	FIELD RUN
402	50	PVC	ALUM	---	---	9	17	FIELD RUN
403	50	PVC	ALUM	---	---	9	17	FIELD RUN
404	50	PVC	ALUM	---	---	9	17	FIELD RUN
405	50	PVC	ALUM	I+ET	---	6	6	FIELD RUN
406	50	PVC	ALUM	I+ET	---	10	6	FIELD RUN
407	50	PVC	ALUM	I+ET	---	5	6	FIELD RUN
408	25	PVC	ALUM	---	---	9	17	FIELD RUN
409	25	PVC	ALUM	---	---	9	17	FIELD RUN
410	25	PVC	ALUM	---	---	9	17	FIELD RUN
411	50	PVC	ALUM	---	---	9	17	FIELD RUN
412	50	PVC	ALUM	---	---	9	17	FIELD RUN
413	50	PVC	ALUM	---	---	9	17	FIELD RUN
414	50	PVC	ALUM	---	---	9	17	FIELD RUN
415	50	PVC	ALUM	---	---	9	17	FIELD RUN
416	50	PVC	ALUM	---	---	9	17	FIELD RUN
417	50	PVC	ALUM	---	---	9	17	FIELD RUN

PIPES

LINE #	DIA.(mm)	MATERIAL	SERVICE	TRACING & INSUL.	LENGTH	REF.DWG. P#	REF.DWG. PU#	COMMENTS
500	20	PVC	CLS	---	---	9	17	FIELD RUN
501	20	PVC	CLS	---	---	9	17	FIELD RUN
502	20	PVC	CLS	---	---	9	17	FIELD RUN
503	50	PVC	CLS	---	---	9	17	FIELD RUN
504	20	PVC	CLS	I+ET	---	5	6	FIELD RUN
505	20	PVC	CLS	---	---	10	15	FIELD RUN
506	50	PVC	CLS	I+ET	---	6	12	FIELD RUN
507	20	PVC	CLS	---	---	6	15	FIELD RUN
508	50	PVC	CLS	I+ET	---	6	12	FIELD RUN
509	20	PVC	CLS	I+ET	---	6	12	FIELD RUN
510	20	PVC	CLS	---	---	9	17	FIELD RUN
511	20	PVC	CLS	---	---	9	17	FIELD RUN
512	20	PVC	CLS	---	---	9	17	FIELD RUN
513	20	PVC	CLS	---	---	9	17	FIELD RUN
514	38	PVC	CLS	---	---	9	17	FIELD RUN
515	50	PVC	CLS	---	---	9	17	FIELD RUN
516	50	PVC	CLS	---	---	9	17	FIELD RUN
517	50	PVC	CLS	---	---	9	17	FIELD RUN
518	50	PVC	CLS	---	---	9	17	FIELD RUN
600	25	PVC	POLY	I+ET	---	5	6	FIELD RUN
601	25	PVC	POLY	---	---	9	--	FIELD RUN
602	25	PVC	POLY	---	---	9	--	FIELD RUN
603	25	PVC	POLY	---	---	9	--	FIELD RUN
604	25	PVC	POLY	---	---	9	--	FIELD RUN
605	25	PVC	POLY	---	---	9	20	FIELD RUN
606	25	PVC	POLY	---	---	9	--	FIELD RUN
607	25	PVC	POLY	---	---	9	--	FIELD RUN
608	25	PVC	POLY	---	---	9	--	FIELD RUN
609	25	PVC	POLY	---	---	9	--	FIELD RUN
610	25	PVC	POLY	---	---	7	20	FIELD RUN
611	25	PVC	POLY	---	---	7	20	FIELD RUN
612	25	PVC	POLY	---	---	7	20	FIELD RUN
701	---	---	---	---	---	-	-	---
702	---	---	---	---	---	-	-	---
703	---	---	---	---	---	-	-	---
704	150	PVC	D	---	24.1	4	3	1E
705	150	PVC	D	---	42.0	4	4	---
706	75	PVC	D	---	32.5	-	15	3E
707	75	PVC	D	---	8.0	-	4	---
708	100	DI	D	---	0.8	5	7	2FC
709	100	DI	D	---	0.8	5	7	2FC
710	100	DI	D	---	29.0	5	6	2E,1T,4FC
711	200	PVC	D	---	39.5	7	4	---
712	100	DI	D	---	11.4	7	8	2E,5FC
713	---	---	---	---	---	-	-	---
714	100	DI	D	---	11.4	7	8	2E,5FC
715	150	DI	D	---	7.2	7	19	1SJ,3FC
716	150	DI	D	---	3.4	7	19	6E,12FC

PIPES

LINE #	DIA.(mm)	MATERIAL	SERVICE	TRACING & INSUL.	LENGTH	REF.DWG. P#	REF.DWG. PU#	COMMENTS
717	200	PVC	D	---	7.0	7	17	1E
718	200	PVC	D	---	62.0	7	G5	---
719	200	DI	D	---	20.0	7	19	---
720	150	DI	CE	---	23.0	7	20	1E,6,1YFC
721	150	PVC	D	---	11.0	7	19	---
722	200	PVC	D	---	3.0	10	21	---
723	150	DI	D	---	5.0	7	9	1SJ,3FC
724	150	DI	D	---	10.3	7	8	1E,3FC
725	150	DI	D	---	5.0	7	9	1SJ,3FC
726	150	DI	D	---	10.3	7	8	1E,3FC
727	200	PVC	D	---	23.0	7	G5	---
728	200	PVC	D	---	16.0	7	G5	---
729	150	PVC	D	---	55.0	5	G5	---
730	125	PVC	D	---	14.0	-	G5	---
731	150	DI	CE	---	10.8	7	20	4E,8FC
732	100	PVC	D	---	16.3	-	17	
733	200	PVC	D	---	15.0	-	G5	
734	200	PVC	D	---	7.0	-	G5	
735	100	PVC	D	---	6.5	-	G5	
736	100	PVC	D	---	8.0	-	G5	
737	100	PVC	D	---	1.5	-	G5	
738	150	PVC	D	---	4.0	-	G5	
739	150	PVC	D	---	7.0	-	G5	
740	50	PVC	D	---	11.5	-	17	
741	50	PVC	D	---	22.9	-	17	
801	75	PVC	EW	---	4.9	10	13	1E,3FC
802	38	PVC	EW	---	56.0	10	G5	2E,1T
803	38	PVC	EW	---	15.0	10	20	3E,1T
804	38	PVC	EW	---	3.0	10	19	1E
805	38	SS	EW	I+ET	2.5	10	2	1T,4FC
806	75	PVC	EW	---	112.5	10	4/13	2E,3T,4RED
807	75	PVC	EW	---	37.0	10	15	2T,2RED
808	38	PVC	EW	---	5.1	10	1	2E
809	38	SS	EW	I+ET	4.6	10	2	1E,1FC
810	25	PVC	EW	---	2.1	10	1	1E,1FC
811	25	SS	EW	I+ET	4.3	10	2	1E,7FC
812	38	PVC	EW	---	11.0	10	4	1T
813	38	PVC	EW	---	40.6	10	14	2E,2T
814	38	PVC	EW	I+ET	0.7	10	14	1E
815	19	PVC	EW	---	1.9	10	14	1E
816	75	PVC	EW	---	4.9	10	13	1E,3FC
817	100	PVC	EW	---	7.7	10	13	2E,3FC
818	100	PVC	EW	---	3.8	10	13	1E,1T,3FC
819	150	PVC	EW	---	45.8	10	13/16	3E,1T,1RED
820	75	PVC	EW	---	7.8	10	15	3E,1T
821	100	SS	EW	I+ET	12.0	10	16	2E,1T,2RED,8FC
822	100	SS	EW	I+ET	12.0	10	16	2E,1T,2RED,8FC
823	75	SS	EW	I+ET	29.8	10	13	1E,1RED,6FC
824	75	SS	EW	I+ET	29.8	10	13	1E,1RED,6FC
825	75	SS	EW	I+ET	12.4	10	13	1E,1RED,4FC
826	50	SS	EW	I+ET	28.5	10	13	1E,4FC

LEGEND

E ELBOW
T TEE
Y WYE
RED REDUCER
FC FLANGED CONNECTION
SJ SWIVEL JOINT
C CROSS

NOTE

THIS DRAWING DOES NOT REPRESENT AS-BUILT CONDITIONS.

No.	Date	Revision
3	OCTOBER/95	ISSUED FOR TENDER
2	SEPT 15/95	ISSUED FOR REVIEW
1	JAN. 16/95	ISSUED FOR M.O.E.E. APPROVAL

REGISTERED PROFESSIONAL ENGINEER H.A. Ibrahim PROVINCE OF ONTARIO 06/95

REGISTERED PROFESSIONAL ENGINEER D.W. Lishman PROVINCE OF ONTARIO SEP 6 95

McNEELY ENGINEERING CONSULTANTS LTD.

Owner: TOWNSHIP OF OSNABRUCK

Project: INGLESIDE SEWAGE TREATMENT PLANT
O.C.W.A. SEWAGE WORKS PROJECT No. 40-0797

Title: PIPES, VALVES & GATES - SCHEDULE II

Design	H.A.I.	Scale	N/A	Proj. No.	2544-4	Dwg No.
Drawn	T.H.	Check	H.A.I.	Date	SEPT 15/95	PU-26

NOTE: QUANTITIES AND LENGTHS LISTED ARE APPROXIMATE. THE CONTRACTOR SHALL BE RESPONSIBLE FOR SUPPLYING AND INSTALLING ALL PIPES AND VALVES REQUIRED FOR THE PLANT OPERATION. PIPES AND VALVES THAT ARE PART OF THE EQUIPMENT PACKAGE MIGHT NOT BE INCLUDED HEREWITH.

PIPES

LINE #	DIA.(mm)	MATERIAL	SERVICE	TRACING & INSUL.	LENGTH	REF.DWG. P#	REF.DWG. PU#	COMMENTS
827	50	SS	EW	I+ET	11.0	10	13	1FC
828	50	SS	EW	I+ET	14.0	10	13	2E,1FC
829	150	PVC	MW	___	49.0	_	G5	2T,2RED
830	25	PE	MW	___	12.0	_	G5	___
831	19	PE	MW	___	53.5	_	G5	___
832	400	PE	EW	___	40.0	6	13/14	3E,4FC
833	800	PE	EW	___	66.0	6	14	___
834	38	PVC	EW	___	16.5	10	15	3E
835	38	PVC	EW	___	3.0	10	15	2E
836	100	SS	EW	___	0.3	_	13	2FC
837	100	SS	EW	___	0.3	_	13	2FC
838	75	SS	EW	___	0.3	_	13	2FC
839	75	SS	EW	___	0.3	_	13	2FC
840	38	PVC	EW	___	3.1	7	20	1E
841	38	PVC	EW	I+ET	4.0	10	19	2E
842	38	PVC	EW	___	5.1	10	20	1E
843	38	PVC	EW	I+ET	4.0	10	_	1E
844	50	SS	EW	I+ET	14.0	10	13	2E,2FC
845	75	SS	EW	I+ET	7.0	10	13	2T, 4FC
846	38	PVC	EW	I+ET	6.0	10	G5	2E
847	38	PVC	EW	---	7.0	10	G5	2E
848	38	PVC	EW	I+ET	4.0	10	19	2E
849	38	CU	EW	---	4.0	-	20	2E,1T
850	38	PVC	EW	I+ET	4.0	6	16	1T,1E
851	38	PVC	EW	---	2.0	9	17	1T,1E
852	38	PVC	EW	---	1.2	10	20	1E,1T
910	200	PVC	ST	---	24.0	-	G5	---
911	300	PVC	ST	---	8.0	-	G5	---
912	375	PVC	ST	---	14.5	-	G5	---
913	375	PVC	ST	---	20.0	-	G5	---
914	300	PVC	ST	---	15.0	-	G5	---
915	200	PVC	ST	---	17.0	-	G5	---
916	200	PVC	ST	---	11.0	-	G5	---
917	250	PVC	ST	---	8.9	-	G5	---
918	375	PVC	ST	---	62.5	-	G5	---
919	200	PVC	ST	---	6.0	-	G5	---
920	200	PVC	ST	---	23.0	-	G5	---

HOSE BIBS

BIB #	DIA.(mm)	TYPE	LINE #	MATERIAL	COATING	SERVICE	----	----	REF.DWG. P#	REF.DWG. PU#	LOCATION
HB001	38	NON FREEZE	809	SS	---	EW	---	---	4	1	HEADWORKS
HB002	38	NON FREEZE	805	SS	---	EW	---	---	4	1	HEADWORKS
HB003	38	---	835	SS	---	EW	---	---	10	15	POLY ROOM
HB004	38	---	834	SS	---	EW	---	---	10	17	ALUM ROOM
HB005	38	NON FREEZE	841	SS	---	EW	---	---	10	19	SLDG LOAD
HB006	38	---	803	SS	---	EW	---	---	10	20	SLDG BLDG
HB007	38	NON FREEZE	843	SS	---	EW	---	---	10	-	CNTRL BLDG
HB008	38	NON FREEZE	846	SS	---	EW	---	---	10	22	PUMP STN
HB009	38	NON FREEZE	814	SS	---	EW	---	---	10	14	PAR FLUME
HB010	38	NON FREEZE	848	SS	---	EW	---	---	10	19	SLDG TANK
HB011	38	NON FREEZE	810	SS	---	EW	---	---	6	16	CLARIFIER #1
HB012	38	---	851	SS	---	EW	---	---	9	17	CHLORINE ROOM

GATES

GATE #	FRAME WIDTH	FRAME HEIGHT	GATE WIDTH	GATE HEIGHT	MATERIAL	REF.DWG. P#	REF.DWG. PU#	COMMENTS
SLG/RW1	1346		1219	508	ALUM.	5	5	RSW
SLG/RW2	1346		1219	508	ALUM.	5	5	RSW
SLG/RW3	1346		1219	508	ALUM.	5	6	RSW
SLG/RW4	1346		1219	508	ALUM.	5	6	RSW
SLG5	381	572	254	254	ALUM.	5	5	RSW
SLG6	381	572	254	254	ALUM.	5	5	RSW
SLG7	330	470	203	203	ALUM.	5	5	SCUM
SLG8	330	470	203	203	ALUM.	5	5	SCUM
SLG9	---	---	---	---	---	-	-	---
SLG10	---	---	---	---	---	-	-	---
SLG11	432	673	305	305	ALUM.	6	6	AS
SLG12	432	673	305	305	ALUM.	6	6	AS
SLG13	432	673	305	305	ALUM.	5	12	AS
SLG14	432	673	305	305	ALUM.	5	12	AS
SLG15	279	368	152	152	ALUM.	5	12	SCUM
SLG/RW16	1041	1924	914	914	ALUM.	-	13	EW
SLG/RW17	1041	1924	914	914	ALUM.	-	13	EW
SLG18	450	825	450	825	ALUM.	5	12	SCUM
SLG19	500	825	500	428	ALUM.	5	12	SCUM
SLG20	390	825	390	825	ALUM.	4	1	HEADWORKS
SLG21	500	825	500	428	ALUM.	4	1	HEADWORKS
SLG22	390	825	390	825	ALUM.	4	1	HEADWORKS
SLG23	500	825	500	825	ALUM.	4	1	HEADWORKS
SLG24	500	825	500	825	ALUM.	4	1	HEADWORKS

VALVES

VALVE #	DIA.(mm)	TYPE	LINE #	MATERIAL	COATING	SERVICE	CONNECT	ACTUATOR	REF.DWG. P#	REF.DWG. PU#	COMMENTS
001	350	GATE	007	CI	I+ET	RSW	FLG.	MAN.	5	5	___
002	350	PLUG	006	CI	___	RSW	FLG.	MAN.	5	5	___
003	350	PLUG	008	CI	___	RSW	FLG.	MAN.	5	5	___
004	100	CHECK	021	CI	___	RSW	FLG.	___	10	21	___
005	100	CHECK	022	CI	___	RSW	FLG.	___	10	21	___
006	100	GATE	021	CI	___	RSW	FLG.	MAN.	10	21	___
007	100	GATE	022	CI	___	RSW	FLG.	MAN.	10	21	___
008	100	GATE	023	CI	___	RSW	FLG.	MAN.	10	21	___
009	100	GATE	023	CI	___	RSW	FLG.	MAN.	10	21	___
010	50	BALL	H-2	CI	___	RSW	HOSE	MAN.	4	2	___
011	75	BALL	H-1	CI	___	RSW	HOSE	MAN.	4	2	___
012	50	BALL	H-3	CI	___	RSW	HOSE	MAN.	4	2	___
013	50	PLUG	028	CI	I+ET	RSW	FLG.	MOTOR	4	2	___
101	200	CHECK	101	SS	___	AA	WAFER	___	8	16	___
102	200	CHECK	102	SS	___	AA	WAFER	___	8	16	___
103	200	CHECK	103	SS	___	AA	WAFER	___	8	16	___
104	200	CHECK	104	SS	___	AA	WAFER	___	8	16	___
105	200	CHECK	105	SS	___	AA	WAFER	___	8	16	___
106	200	BUTTER.	101	SS	___	AA	WAFER	MANUAL	8	16	___
107	200	BUTTER.	102	SS	___	AA	WAFER	MANUAL	8	16	___
108	200	BUTTER.	103	SS	___	AA	WAFER	MANUAL	8	16	___
109	200	BUTTER.	104	SS	___	AA	WAFER	MANUAL	8	16	___
110	200	BUTTER.	105	SS	___	AA	WAFER	MANUAL	8	16	___
111	___	___	___	___	___	___	___	___	___	___	___
112	___	___	___	___	___	___	___	___	___	___	___
113	___	___	___	___	___	___	___	___	___	___	___
114	___	___	___	___	___	___	___	___	___	___	___
115	___	___	___	___	___	___	___	___	___	___	___
116	250	BUTTER.	113	SS	___	AA	WAFER	MANUAL	8	16	___
117	250	BUTTER.	113	SS	___	AA	WAFER	MANUAL	8	16	___
118	12	BALL	113	SS	___	AA	THD'D.	MANUAL	8	16	DRAIN
119	200	BUTTER.	114	SS	___	AA	WAFER	MANUAL	7	8	___
120	300	BUTTER.	115	SS	___	AA	WAFER	MANUAL	7	8	___
121	100	BUTTER.	122	SS	___	AA	WAFER	MANUAL	5	6	___
122	100	BUTTER.	123	SS	___	AA	WAFER	MANUAL	5	6	___
123	100	BUTTER.	124	SS	___	AA	WAFER	MANUAL	5	6	___
124	100	BUTTER.	125	SS	___	AA	WAFER	MANUAL	5	6	___
125	100	BUTTER.	120	SS	___	AA	WAFER	MANUAL	5	6	___
126	100	BUTTER.	121	SS	___	AA	WAFER	MANUAL	5	6	___
127	38	BALL	126	SS	___	AA	SOCKET	MANUAL	5	6	FLOW METER
128	38	BALL	127	SS	___	AA	SOCKET	MANUAL	5	6	FLOW METER
129	38	BALL	128	SS	___	AA	SOCKET	MANUAL	5	6	FLOW METER
130	38	BALL	129	SS	___	AA	SOCKET	MANUAL	5	6	FLOW METER
131	38	BALL	130	SS	___	AA	SOCKET	MANUAL	5	6	FLOW METER
132	38	BALL	131	SS	___	AA	SOCKET	MANUAL	5	6	FLOW METER
133	38	BALL	132	SS	___	AA	SOCKET	MANUAL	5	6	FLOW METER
134	38	BALL	133	SS	___	AA	SOCKET	MANUAL	5	6	FLOW METER

LEGEND

E	ELBOW
T	TEE
Y	WYE
RED	REDUCER
FC	FLANGED CONNECTION
SJ	SWIVEL JOINT
C	CROSS

NOTE

THIS DRAWING DOES NOT REPRESENT AS-BUILT CONDITIONS.

No.	Date	Revision
3	OCTOBER/95	ISSUED FOR TENDER
2	SEPT 15/95	ISSUED FOR REVIEW
1	JAN. 16/95	ISSUED FOR M.O.E.E. APPROVAL

REGISTERED PROFESSIONAL ENGINEER H.A. Ibrahim PROVINCE OF ONTARIO Oct 6/95

REGISTERED PROFESSIONAL ENGINEER D.W. Lishman PROVINCE OF ONTARIO Oct 6/95

McNEELY ENGINEERING CONSULTANTS LTD.

Owner	TOWNSHIP OF OSNABRUCK
Project	INGLESIDE SEWAGE TREATMENT PLANT O.C.W.A. SEWAGE WORKS PROJECT No. 40-0797
Title	PIPES, VALVES & GATES - SCHEDULE III

Design	H.A.I.	Scale	N/A	Proj. No. 2544-4	Dwg No. PU-27
Drawn	T.H.	Check	H.A.I.	Date SEPT 15/95	

NOTE: QUANTITIES AND LENGTHS LISTED ARE APPROXIMATE. THE CONTRACTOR SHALL BE RESPONSIBLE FOR SUPPLYING AND INSTALLING ALL PIPES AND VALVES REQUIRED FOR THE PLANT OPERATION. PIPES AND VALVES THAT ARE PART OF THE EQUIPMENT PACKAGE MIGHT NOT BE INCLUDED HEREWITH.

VALVES

VALVE #	DIA.(mm)	TYPE	LINE #	MATERIAL	COATING	SERVICE	CONNECT	ACTUATOR	REF.DWG. P#	REF.DWG. PU#	COMMENTS
135	38	BALL	134	SS	___	AA	SOCKET	MANUAL	5	6	FLOW METER
136	38	BALL	135	SS	___	AA	SOCKET	MANUAL	5	6	FLOW METER
137	38	BALL	136	SS	___	AA	SOCKET	MANUAL	7	8	FLOW METER
138	38	BALL	137	SS	___	AA	SOCKET	MANUAL	7	8	FLOW METER
139	12	BALL	CC-1	SS	___	VENT	THD'D	MANUAL	4	2	DRAIN
140	12	BALL	CC-2	SS	___	VENT	THD'D	MANUAL	5	4	DRAIN
176	50	GATE	176	CI	___	VENT	THD'D	MANUAL	4	2	___
177	50	AIR RELEASE	176	CI	___	VENT	THD'D	___	4	2	___
178	50	GATE	181	CI	___	VENT	THD'D	MANUAL	4	2	___
179	50	AIR RELEASE	181	CI	___	VENT	THD'D	___	4	2	___
201	200	PLUG	219	CI	___	RAS	FLG	MANUAL	10	15	___
202	200	PLUG	201	CI	___	RAS	FLG	MANUAL	10	15	___
203	100	PLUG	202	CI	___	RAS	FLG	MANUAL	10	16	___
204	100	PLUG	203	CI	___	RAS	FLG	MANUAL	10	16	___
205	100	PLUG	204	CI	___	RAS	FLG	MANUAL	10	16	___
206	100	CHECK	205	CI	___	RAS	WAFER	___	10	16	WEIGHTED
207	100	CHECK	206	CI	___	RAS	WAFER	___	10	16	WEIGHTED
208	100	CHECK	207	CI	___	RAS	WAFER	___	10	16	WEIGHTED
209	100	PLUG	205	CI	___	RAS	FLG	___	10	16	___
210	100	PLUG	206	CI	___	RAS	FLG	___	10	16	___
211	100	PLUG	207	CI	___	RAS	FLG	___	10	16	___
212	200	PLUG	208	CI	___	RAS	FLG	___	10	16	___
213	200	PLUG	208	CI	___	RAS	FLG	___	10	16	___
214	150	PLUG	213	CI	___	RAS	FLG	___	5	5	___
215	150	PLUG	214	CI	___	RAS	FLG	___	5	5	___
251	100	PLUG	252	CI	___	WAS	FLG	MANUAL	7	8	BURIED
252	100	PLUG	254	CI	___	WAS	FLG	MANUAL	7	8	BURIED
253	100	PLUG	251	CI	___	WAS	FLG	ACT.	7	8	BURIED
254	100	PLUG	253	CI	___	WAS	FLG	ACT.	7	8	BURIED

VALVES

VALVE #	DIA.(mm)	TYPE	LINE #	MATERIAL	COATING	SERVICE	CONNECT	ACTUATOR	REF.DWG. P#	REF.DWG. PU#	COMMENTS
301	100	PLUG	301	CI	___	DS	FLG	MANUAL	7	8	BURIED
302	100	PLUG	302	CI	___	DS	FLG	MANUAL	7	8	BURIED
303	___	___	___	___	___	___	___	___	___	___	___
304	___	___	___	___	___	___	___	___	___	___	___
305	100	CHECK	P-4	CI	___	DS	FLG	___	7	8	BURIED
306	100	CHECK	P-5	CI	___	DS	FLG	___	7	8	BURIED
307	100	PLUG	307	CI	___	RSD	FLG	MANUAL	7	15	___
308	100	PLUG	307	CI	___	DS	FLG	MANUAL	7	15	___
309	100	PLUG	308	CI	___	DS	FLG	MANUAL	7	15	___
310	100	PLUG	309	CI	___	DS	FLG	MANUAL	7	15	___
311	100	CHECK	308	CI	___	DS	WAFER	___	7	15	___
312	100	CHECK	309	CI	___	DS	WAFER	___	7	15	___
313	100	PLUG	315	CI	___	DS	FLG	MANUAL	7	20	BURIED
314	100	GATE	310	CI	___	DS	FLG	MANUAL	7	20	___
315	75	CHECK	316	CI	___	TS	FLG	___	7	20	___
316	75	CHECK	319	CI	___	TS	FLG	___	7	20	___
317	75	PLUG	318	CI	___	TS	FLG	MANUAL	7	20	___
318	75	PLUG	319	CI	___	TS	FLG	MANUAL	7	20	___
319	75	CHECK	322	CI	___	TS	FLG	___	7	20	___
320	75	CHECK	312	CI	___	TS	FLG	___	7	20	___
321	75	PLUG	312	CI	___	TS	FLG	MANUAL	7	20	___
322	75	PLUG	312	CI	___	TS	FLG	MANUAL	7	20	___
323	100	PLUG	320	CI	___	TS	FLG	MANUAL	7	20	___
324	100	PLUG	320	CI	___	TS	FLG	MANUAL	7	20	___
325	100	PLUG	324	CI	___	TS	FLG	MANUAL	7	20	BURIED
326	100	PLUG	318	CI	___	TS	FLG	MANUAL	7	20	BURIED
327	100	PLUG	326	CI	___	TS	FLG	MANUAL	7	20	BURIED
328	100	PLUG	306	CI	___	DS	FLG	MANUAL	7	15	___
329	75	PLUG	322	CI	___	RSD	FLG	MANUAL	7	20	___
330	150	PLUG	311	CI	___	TS	FLG	MANUAL	7	20	BURIED
331	100	PLUG	312	CI	___	TS	FLG	MANUAL	7	2	___
332	50	PLUG	328	CI	___	DS	FLG	MANUAL	7	20	___
333	50	PLUG	328	CI	___	DS	FLG	MANUAL	7	20	___
334	100	PLUG	310	CI	___	DS	FLG	MANUAL	7	20	___
376	75	CHECK	378	CI	___	SCUM	FLG	___	6	12	P-8
377	75	PLUG	377	CI	___	SCUM	FLG	MANUAL	6	12	___
378	___	___	___	___	___	___	___	___	___	___	___
379	___	___	___	___	___	___	___	___	___	___	___
380	___	___	___	___	___	___	___	___	___	___	___
381	75	PLUG	382	CI	___	SCUM	FLG	MANUAL	6	12	___
382	75	PLUG	387	CI	___	SCUM	FLG	MANUAL	7	8	BURIED
383	75	PLUG	388	CI	___	SCUM	FLG	MANUAL	7	8	BURIED

VALVES

VALVE #	DIA.(mm)	TYPE	LINE #	MATERIAL	COATING	SERVICE	CONNECT	ACTUATOR	REF.DWG. P#	REF.DWG. PU#	COMMENTS
401		BALL	417	PVC	---	ALUM	THD'D	MANUAL	9	17	---
402	50	BALL	417	PVC	---	ALUM	THD'D	MANUAL	9	17	---
403	50	BALL	417	PVC	---	ALUM	THD'D	MANUAL	9	17	---
404	50	BALL	417	PVC	---	ALUM	THD'D	MANUAL	9	17	---
405	50	BALL	413	PVC	---	ALUM	THD'D	MANUAL	9	17	---
406	50	BALL	413	PVC	---	ALUM	THD'D	MANUAL	9	17	---
407	50	BALL	414	PVC	---	ALUM	THD'D	MANUAL	9	17	---
408	50	BALL	414	PVC	---	ALUM	THD'D	MANUAL	9	17	---
409	25	BALL	408	PVC	---	ALUM	THD'D	MANUAL	9	17	---
410	25	BALL	409	PVC	---	ALUM	THD'D	MANUAL	9	–	---
411	25	BALL	400	PVC	---	ALUM	THD'D	MANUAL	9	–	---
412	25	BALL	401	PVC	---	ALUM	THD'D	MANUAL	9	–	---
413	25	PRV	418	STEEL	---	ALUM	THD'D	MANUAL	9	–	---
414	25	PRV	419	STEEL	---	ALUM	THD'D	MANUAL	9	–	---
415	50	SOLEN'D	402	STEEL	---	ALUM	THD'D	ACT.	9	–	---
416	50	BALL	402	PVC	---	ALUM	THD'D	MANUAL	9	–	---
417	50	SOLEN'D	403	STEEL	---	ALUM	THD'D	ACT.	9	–	---
418	50	BALL	403	PVC	---	ALUM	THD'D	MANUAL	9	–	---
419	50	BALL	404	PVC	---	ALUM	THD'D	MANUAL	9	–	---
420	50	BALL	404	PVC	---	ALUM	THD'D	MANUAL	9	–	---
421	50	BALL	405	PVC	---	ALUM	THD'D	MANUAL	6	6	---
422	50	BALL	406	PVC	---	ALUM	THD'D	MANUAL	10	6	---
423	50	BALL	407	PVC	---	ALUM	THD'D	MANUAL	5	6	---
424	25	BALL	410	PVC	---	ALUM	THD'D	MANUAL	9	–	---
425	25	BALL	410	PVC	---	ALUM	THD'D	MANUAL	9	–	---
426	25	BALL	400	PVC	---	ALUM	THD'D	MANUAL	9	–	---
427	25	BALL	401	PVC	---	ALUM	THD'D	MANUAL	9	–	---
501	50	BALL	518	PVC	---	CHLORINE	THD'D	MANUAL	9	17	---
502	50	BALL	518	PVC	---	CHLORINE	THD'D	MANUAL	9	17	---
503	50	BALL	518	PVC	---	CHLORINE	THD'D	MANUAL	9	17	---
504	50	BALL	518	PVC	---	CHLORINE	THD'D	MANUAL	9	17	---
505	50	BALL	516	PVC	---	CHLORINE	THD'D	MANUAL	9	17	---
506	25	BALL	516	PVC	---	CHLORINE	THD'D	MANUAL	9	17	---
507	50	BALL	517	PVC	---	CHLORINE	THD'D	MANUAL	9	17	---
508	25	BALL	517	PVC	---	CHLORINE	THD'D	MANUAL	9	17	---
509	20	BALL	510	PVC	---	CHLORINE	THD'D	MANUAL	9	–	---
510	20	BALL	511	PVC	---	CHLORINE	THD'D	MANUAL	9	–	---
511	20	BALL	512	PVC	---	CHLORINE	THD'D	MANUAL	9	–	---
512	20	BALL	500	PVC	---	CHLORINE	THD'D	MANUAL	9	–	---
513	20	BALL	501	PVC	---	CHLORINE	THD'D	MANUAL	9	–	---
514	20	BALL	502	PVC	---	CHLORINE	THD'D	MANUAL	9	–	---
515	20	PRV	500	STEEL	---	CHLORINE	THD'D	–	9	–	---
516	20	PRV	501	STEEL	---	CHLORINE	THD'D	–	9	–	---
517	20	PRV	502	STEEL	---	CHLORINE	THD'D	–	9	–	---
518	20	SOLEN'D	500	STEEL	---	CHLORINE	THD'D	ACT.	9	–	---
519	20	BALL	500	PVC	---	CHLORINE	THD'D	MANUAL	9	–	---
520	20	SOLEN'D	501	STEEL	---	CHLORINE	THD'D	ACT.	9	–	---
521	20	BALL	501	PVC	---	CHLORINE	THD'D	MANUAL	9	–	---
522	20	SOLEN'D	502	STEEL	---	CHLORINE	THD'D	ACT.	9	–	---

NOTE

THIS DRAWING DOES NOT REPRESENT AS-BUILT CONDITIONS.

LEGEND

E	ELBOW
T	TEE
Y	WYE
RED	REDUCER
FC	FLANGED CONNECTION
SJ	SWIVEL JOINT
C	CROSS

No.	Date	Revision
3	OCTOBER/95	ISSUED FOR TENDER
2	SEPT 15/95	ISSUED FOR REVIEW
1	JAN. 16/95	ISSUED FOR M.O.E.E. APPROVAL

REGISTERED PROFESSIONAL ENGINEER H.A. Ibrahim PROVINCE OF ONTARIO 95 06 19

REGISTERED PROFESSIONAL ENGINEER D.W. Fishman PROVINCE OF ONTARIO 95 06 19

McNEELY ENGINEERING CONSULTANTS LTD.

Owner	TOWNSHIP OF OSNABRUCK
Project	INGLESIDE SEWAGE TREATMENT PLANT O.C.W.A. SEWAGE WORKS PROJECT No. 40-0797
Title	PIPES, VALVES & GATES – SCHEDULE IV

Design	H.A.I.	Scale	N/A	Proj. No.	2544-4	Dwg No.	PU-28
Drawn	T.H.	Check	H.A.I.	Date	SEPT 15/95		

NOTE: QUANTITIES AND LENGTHS LISTED ARE APPROXIMATE. THE CONTRACTOR SHALL BE RESPONSIBLE FOR SUPPLYING AND INSTALLING ALL PIPES AND VALVES REQUIRED FOR THE PLANT OPERATION. PIPES AND VALVES THAT ARE PART OF THE EQUIPMENT PACKAGE MIGHT NOT BE INCLUDED HEREWITH.

VALVES

VALVE #	DIA.(mm)	TYPE	LINE #	MATERIAL	COATING	SERVICE	CONNECT	ACTUATOR	REF.DWG. P#	REF.DWG. PU#	COMMENTS
523	20	BALL	502	PVC	---	CHLORINE	THD'D	MANUAL	9	–	---
524	50	BALL	503	PVC	---	CHLORINE	THD'D	MANUAL	9	–	---
525	50	BALL	503	PVC	---	CHLORINE	THD'D	MANUAL	9	–	---
526	50	BALL	503	PVC	---	CHLORINE	THD'D	MANUAL	9	–	---
527	20	BALL	504	PVC	---	CHLORINE	THD'D	MANUAL	5	6	---
528	20	BALL	505	PVC	---	CHLORINE	THD'D	MANUAL	10	15	---
529	50	BALL	506	PVC	---	CHLORINE	THD'D	MANUAL	6	12	---
530	20	BALL	507	PVC	---	CHLORINE	THD'D	MANUAL	10	15	---
531	50	BALL	508	PVC	---	CHLORINE	THD'D	MANUAL	9	12	---
532	20	BALL	509	PVC	---	CHLORINE	THD'D	MANUAL	9	12	---
533	20	BALL	513	PVC	---	CHLORINE	THD'D	MANUAL	9	–	---
534	20	BALL	513	PVC	---	CHLORINE	THD'D	MANUAL	9	–	---
535	20	BALL	500	PVC	---	CHLORINE	THD'D	MANUAL	9	–	---
536	20	BALL	501	PVC	---	CHLORINE	THD'D	MANUAL	9	–	---
537	20	BALL	502	PVC	---	CHLORINE	THD'D	MANUAL	9	–	---
600	19	BALL	850	PVC	---	POLYMER	THD'D	MANUAL	9	–	---
601	19	BALL	831	PVC	---	POLYMER	THD'D	MANUAL	9	–	---
602	19	BALL	850	STEEL	---	POLYMER	THD'D	ACT.	9	–	---
603	19	SOLEN'D	831	STEEL	---	POLYMER	THD'D	ACT.	9	–	---
604	19	BALL	831	PVC	---	POLYMER	THD'D	MANUAL	9	–	---
605	25	BALL	602	PVC	---	POLYMER	THD'D	MANUAL	9	–	---
606	25	CHECK	602	PVC	---	POLYMER	THD'D	--	9	–	---
607	25	BALL	604	PVC	---	POLYMER	THD'D	MANUAL	9	–	---
608	25	SOLEN'D	604	STEEL	---	POLYMER	THD'D	ACT.	9	–	---
609	25	BALL	601	PVC	---	POLYMER	THD'D	MANUAL	9	–	---
610	25	CHECK	601	PVC	---	POLYMER	THD'D	--	9	–	---
611	25	BALL	603	PVC	---	POLYMER	THD'D	MANUAL	9	–	---
612	25	SOLEN'D	603	PVC	---	POLYMER	THD'D	ACT.	9	–	---
613	25	BALL	600	PVC	---	POLYMER	THD'D	MANUAL	5	6	---
614	25	BALL	605	PVC	---	POLYMER	THD'D	MANUAL	7	20	---
615	25	BALL	607	PVC	---	POLYMER	THD'D	MANUAL	9	–	---
616	25	CHECK	609	PVC	---	POLYMER	THD'D	--	9	–	---
617	25	BALL	609	PVC	---	POLYMER	THD'D	MANUAL	9	–	---
618	25	BALL	606	PVC	---	POLYMER	THD'D	MANUAL	9	–	---
619	25	CHECK	608	PVC	---	POLYMER	THD'D	--	9	–	---
620	25	BALL	608	PVC	---	POLYMER	THD'D	MANUAL	9	–	---
621	25	SOLEN'D	608	STEEL	---	POLYMER	THD'D	ACT.	7	20	---
622	25	MODULATE THROTTLE	610	STEEL	---	POLYMER	THD'D	ACT.	7	20	---
623	25	MODULATE THROTTLE	611	STEEL	---	POLYMER	THD'D	ACT.	7	20	---
624	25	MODULATE THROTTLE	612	STEEL	---	POLYMER	THD'D	ACT.	7	20	---

VALVES

VALVE #	DIA.(mm)	TYPE	LINE #	MATERIAL	COATING	SERVICE	CONNECT	ACTUATOR	REF.DWG. P#	REF.DWG. PU#	COMMENTS
701	100	MUD	708	DI	---	D	FLG	MANUAL	5	6	---
702	100	MUD	709	DI	---	D	FLG	MANUAL	5	6	---
703	100	MUD	712	DI	---	D	FLG	MANUAL	7	8	---
704	100	MUD	714	DI	---	D	FLG	MANUAL	7	8	---
705	150	PLUG	723	DI	---	D	FLG	MANUAL	7	8	---
706	150	PLUG	722	DI	---	D	FLG	MANUAL	7	8	---
707	--	--	--	--	---	--	--	--	–	–	---
708	150	PLUG	715	DI	---	D	FLG	MANUAL	7	19	---
801	75	GATE	801	CI	---	EW	FLG	MANUAL	10	13	---
802	75	GATE	816	CI	---	EW	FLG	MANUAL	10	13	---
803	100	GATE	817	CI	---	EW	FLG	MANUAL	10	13	---
804	100	GATE	818	CI	---	EW	FLG	MANUAL	10	13	---
805	50	GATE	827	CI	I+ET	EW	FLG	MANUAL	10	13	---
806	50	GATE	827	CI	I+ET	EW	FLG	MANUAL	10	13	---
807	75	GATE	823	CI	I+ET	EW	FLG	MANUAL	10	13	---
808	75	GATE	845	CI	I+ET	EW	FLG	MANUAL	10	13	---
809	75	GATE	824	CI	I+ET	EW	FLG	MANUAL	10	13	---
810	50	GATE	844	CI	I+ET	EW	FLG	MANUAL	10	13	---
811	50	GATE	826	CI	I+ET	EW	FLG	MANUAL	10	13	---
812	75	GATE	825	CI	I+ET	EW	FLG	MANUAL	10	13	---
813	38	GLOBE	840	PVC	---	EW	THD'D	MANUAL	7	20	BURIED
814	38	SOLEN'D	840	BRASS	---	EW	THD'D	---	7	20	---
815	19	GLOBE	815	PVC	---	EW	THD'D	MANUAL	10	14	---
816	25	BALL	811	SS	I+ET	EW	THD'D	MANUAL	10	2	---
817	25	BALL	811	SS	I+ET	EW	THD'D	SOLEN'D	10	2	---
818	100	GATE	821	CI	---	EW	FLG	MANUAL	10	16	---
819	100	GATE	822	CI	---	EW	FLG	MANUAL	10	16	---
820	75	GATE	825	CI	I+ET	EW	FLG	MANUAL	10	13	---
821	75	GATE	845	CI	I+ET	EW	FLG	MANUAL	10	13	---
822	75	GATE	824	CI	I+ET	EW	FLG	MANUAL	10	13	---
823	75	GATE	824	CI	I+ET	EW	FLG	MANUAL	10	13	---
824	75	GATE	823	CI	I+ET	EW	FLG	MANUAL	10	13	---
825	75	GATE	823	CI	I+ET	EW	FLG	MANUAL	10	13	---
826	---	---	---	---	---	---	---	---	–	–	---
827	75	GATE	820	PVC	---	EW	FLG	MANUAL	10	15	---
828	75	GATE	820	PVC	---	EW	FLG	MANUAL	10	15	---
829	38	GLOBE	842	PVC	--	EW	THD'D	MANUAL	7	20	BURIED
830	38	GLOBE	849	BRASS	--	EW	THD'D	MANUAL	7	20	---
831	38	GLOBE	849	BRASS	--	EW	THD'D	MANUAL	7	20	---
832	38	GLOBE	849	BRASS	--	EW	THD'D	MANUAL	7	20	---
833	38	GLOBE	852	CI	–	EW	THD'D	MANUAL	10	20	BURIED

VALVES

VALVE #	DIA.(mm)	TYPE	LINE #	MATERIAL	COATING	SERVICE	CONNECT	ACTUATOR	REF. DWG. P#	REF. DWG. PU#	COMMENTS
901	10	BALL	___	SS	___	SA	N&F	MANUAL	4	3	___
902	10	BALL	___	SS	___	SA	N&F	MANUAL	4	2	___
903	10	BALL	___	SS	___	SA	N&F	MANUAL	6	–	___
904	10	BALL	___	SS	___	SA	N&F	MANUAL	6	–	___

NOTE

THIS DRAWING DOES NOT REPRESENT AS-BUILT CONDITIONS.

LEGEND

E	ELBOW
T	TEE
Y	WYE
RED	REDUCER
FC	FLANGED CONNECTION
SJ	SWIVEL JOINT
C	CROSS

No.	Date	Revision
3	OCTOBER/95	ISSUED FOR TENDER
2	SEPT 15/95	ISSUED FOR REVIEW
1	JAN. 16/95	ISSUED FOR M.O.E.E. APPROVAL

REGISTERED PROFESSIONAL ENGINEER H.A. Ibrahim Sept 15/95 PROVINCE OF ONTARIO

REGISTERED PROFESSIONAL ENGINEER D.W. Lishman PROVINCE OF ONTARIO

McNEELY ENGINEERING CONSULTANTS LTD.

Owner: TOWNSHIP OF OSNABRUCK

Project: INGLESIDE SEWAGE TREATMENT PLANT
O.C.W.A. SEWAGE WORKS PROJECT No. 40-0797

Title: PIPES, VALVES & GATES – SCHEDULE V

Design	H.A.I.	Scale	N/A	Proj. No.	2544-4	Dwg No.
Drawn	T.H.	Check	H.A.I.	Date	SEPT 15/95	PU-29

NOTE: QUANTITIES AND LENGTHS LISTED ARE APPROXIMATE. THE CONTRACTOR SHALL BE RESPONSIBLE FOR SUPPLYING AND INSTALLING ALL PIPES AND VALVES REQUIRED FOR THE PLANT OPERATION. PIPES AND VALVES THAT ARE PART OF THE EQUIPMENT PACKAGE MIGHT NOT BE INCLUDED HEREWITH.

DRESSER COUPLINGS

CPLG. #	DIA.(mm)	STYLE	LINE #	MATERIAL	----	SERVICE	-----	----	REF. DWG. P#	REF. DWG. PU#	COMMENTS
D801	75	38	801	STEEL	___	EW	---	---	10	13	___
D802	75	38	816	STEEL	___	EW	---	---	10	13	___
D803	100	38	817	STEEL	___	EW	---	---	10	13	___
D804	100	38	818	STEEL	___	EW	---	---	10	13	___
D805	100	38	819	STEEL	___	EW	---	---	10	15	___
D806	75	38	807	STEEL	___	EW	---	---	10	15	___
D807	25	38	810	STEEL	___	EW	---	---	10	1	___
D808	38	38	808	STEEL	___	EW	---	---	10	1	___
D809	400	38	002	STEEL	___	RSW	---	---	4	2	___
D810	300	38	003	STEEL	___	RSW	---	---	4	2	___
D811	350	38	005	STEEL	___	RSW	---	---	4	2	___
D812	350	38	004	STEEL	___	RSW	---	---	4	5	___
D813	100	38	021	STEEL	___	RSW	---	---	10	21	___
D814	100	38	022	STEEL	___	RSW	---	---	10	21	___
D815	100	38	024	STEEL	___	RSW	---	---	10	21	___
D816	150	38	213	STEEL	___	RAS	---	---	–	5	___
D817	150	38	214	STEEL	___	RAS	---	---	–	5	___
D818	100	38	251	STEEL	___	WAS	---	---	7	8	___
D819	100	38	252	STEEL	___	WAS	---	---	7	8	___
D820	100	38	253	STEEL	___	WAS	---	---	7	8	___
D821	100	38	254	STEEL	___	WAS	---	---	7	8	___
D822	100	38	301	STEEL	___	DS	---	---	7	8	___
D823	100	38	301	STEEL	___	DS	---	---	7	8	___
D824	100	38	302	STEEL	___	DS	---	---	7	8	___
D825	100	38	302	STEEL	___	DS	---	---	7	8	___
D826	100	38	303	STEEL	___	DS	---	---	7	8	___
D827	100	38	304	STEEL	___	DS	---	---	7	8	___
D828	100	38	305	STEEL	___	DS	---	---	7	8	___
D829	100	38	306	STEEL	___	DS	---	---	4	5	___
D830	150	38	211	STEEL	___	RAS	---	---	10	8	___
D831	150	38	212	STEEL	___	RAS	---	---	10	8	___
D832	75	38	386	STEEL	___	SCUM	---	---	7	8	___
D833	100	38	314	STEEL	___	TS	---	---	7	20	___
D834	100	38	315	STEEL	___	TS	---	---	7	20	___
D835	150	38	716	STEEL	___	D	---	---	7	20	___
D836	75	38	387	STEEL	___	SCUM	---	---	7	8	___
D837	75	38	388	STEEL	___	SCUM	---	---	7	8	___
D838	100	38	710	STEEL	___	D	---	---	5	6	___
D839	100	38	712	STEEL	___	D	---	---	7	8	___
D840	100	38	714	STEEL	___	D	---	---	7	8	___
D841	150	38	724	STEEL	___	D	---	---	7	8	___

DRESSER COUPLINGS

CPLG. #	DIA.(mm)	STYLE	LINE #	MATERIAL	----	SERVICE	-----	----	REF. DWG. P#	REF. DWG. PU#	COMMENTS
D842	150	38	726	STEEL	___	D	---	---	7	8	___
D843	---	---	---	---	___	---	---	---	–	–	___
D844	---	---	---	---	___	---	---	---	–	–	___
D845	800	38	833	STEEL	___	EW	---	---	6	14	___
D846	400	38	832	STEEL	___	EW	---	---	6	13	___
D847	400	38	032	STEEL	___	EW	---	---	6	14	___
D848	200	38	717	STEEL	___	D	---	---	7	8	___

--- #	DIA.(mm)	TYPE	LINE #	MATERIAL	-----	SERVICE	------	------	REF. DWG. P#	REF. DWG. PU#	COMMENTS

GENERAL NOTES: STRUCTURAL

GENERAL:

- STRUCTURAL DRAWINGS SHALL BE READ IN CONJUNCTION WITH ALL RELEVANT MECHANICAL, ELECTRICAL AND PROCESS DRAWINGS, SOILS REPORT AND SPECIFICATIONS.
- THE CONTRACTOR SHALL VERIFY ALL RELEVANT DIMENSIONS ON THE STRUCTURAL DRAWINGS WITH DIMENSIONS ON OTHER DRAWINGS OR MEASURED IN THE FIELD PRIOR TO PROCEEDING WITH THE WORK. THE ENGINEER SHALL BE ADVISED OF ANY DISCREPANCY FOUND.
- DO NOT SCALE DRAWINGS.
- ALL DIMENSIONS ARE IN MILLIMETRES UNLESS NOTED OTHERWISE.
- ALL WORK SHALL COMPLY WITH THE PROVISIONS OF THE ONTARIO BUILDING CODE 1990, THE OCCUPATIONAL HEALTH AND SAFETY ACT, MUNICIPAL BYLAWS AND BEST TRADE PRACTICES.
- THESE DRAWINGS SHOW THE COMPLETED STRUCTURE. THE CONTRACTOR IS RESPONSIBLE FOR SAFETY ON THE JOB SITE, AND DESIGN, INSTALLATION, AND SUPERVISION OF ALL TEMPORARY BRACING, LOADS AND SUPPORTS.
- WATER TIGHTNESS OF ALL LIQUID RETAINING STRUCTURES SHALL BE TESTED BEFORE BACKFILLING.
- FEATURES OF CONSTRUCTION NOT FULLY SHOWN, SHALL BE OF THE SAME CHARACTER AS SHOWN FOR SIMILAR CONDITIONS.
- DESIGN LOADS:

GROUND LOAD:	SNOW = 2.0 kPa	RAIN = 0.4 kPa
EFFLUENT DENSITY:	10.2 kN/m^3	
WIND PRESSURE:	q_{30} = 0.39 kPa,	q_{10} = 0.32 kPa
EARTHQUAKE:	Za = 4, Zv =	v = 0.10

- LIVE LOADS, FOR WHICH THE VARIOUS FLOORS AND ROOFS HAVE BEEN DESIGNED, ARE INDICATED ON THE FLOOR AND ROOFPLAN DRAWINGS.
- LATERAL EARTH PRESSURES FOR DESIGN OF TANK WALLS HAVE BEEN CALCULATED USING AN EQUIVALENT FLUID PRESSURE DISTRIBUTION, A CO-EFFICIENT OF EARTH PRESSURE AT REST, Ko OF 0.5 AND A UNIT WEIGHT OF 22 kN/m^3 FOR THE BACKFILL MATERIAL.

FOUNDATIONS:

- A SOILS INVESTIGATION HAS BEEN CARRIED OUT BY LDER ASSOCIATES LTD.; SEE REPORT NO. 931-2054 DATED JAN., 1995, ORIGINAL RECENT REVISION.
- FOOTINGS AND BASE SLABS HAVE BEEN DESIGNED FOR AN AVERAGE NET INCREASE IN BEARING PRESSURE AS FOLLOWS:

CONTROL BUILDING	150 kPa
HEADWORKS	150 kPa
AERATION BASINS & AEROBIC DIGESTERS	150 kPa
SECONDARY CLARIFIERS & SCUM CHAMBE	150 kPa
FLOCCULATION BASIN	150 kPa
SLUDGE STORAGE TANK	100 kPa
EQUIP. ROOM & ALUM BUILDING	150 kPa
PARSHALL FLUME	150 kPa

- GEOTECHNICAL ENGINEER SHALL APPROVE METHODS EXCAVATION, DEWATERING AND ALL BEARING SURFACES PRIOR TO PLACEMENT OF CONCRETE.
- ALL BEARING SURFACES SHALL BE PROVIDED WITH mm OF COMPACTED GRANULAR "A" AND 50 mm CONCRETE SKIM SLAB
- THE LINE OF SLOPE BETWEEN ADJACENT EXCAVATIONS OR BASE SLABS, FOOTINGS OR TRENCHES OR ALONG STEPPED FOOTINGS SHALL NOT EXCEED A RISE OF 7 IN A RUN OF 10.
- BASE SLABS AND FOOTINGS WHICH WILL BE EXPOSED TO FREEZING IN THE FINISHED STRUCTURES SHALL BE FOUNDED AT A MINIMUM OF 1500 mm BELOW FINISHED GRADE UNLESS NOTED OTHERWISE.
- SOIL OR BACKFILL ADJACENT TO AND BELOW ALL SLABS AND FOOTINGS AND ADJACENT TO FOUNDATION WALLS SHALL BE PROTECTED FROM FREEZING AT ALL TIMES.
- IF ANY FROZEN MATERIAL SHOULD BE FOUND TO OCCUR BELOW THE TANK BASE SLABS, IT SHALL BE REMOVED AND REPLACED WITH GRANULAR MATERIAL COMPACTED TO A MINIMUM OF 95% MODIFIED PROCTOR DENSITY.
- IF ANY MATERIAL BELOW FOOTINGS IS FOUND TO BE FROZEN, IT SHALL BE REMOVED AND REPLACED WITH CONCRETE.
- DO NOT BACKFILL AGAINST LIQUID RETAINING STRUCTURES UNTIL LEAK TESTING HAS BEEN COMPLETED AND ACCEPTED BY ENGINEER.

CONCRETE REINFORCEMENT:

- REINFORCING STEEL SHALL BE IN ACCORDANCE WITH CAN/CSA-G30.18-M92 GRADE: 400 MPa. BARS MARKED WITH PREFIX E SHALL BE EPOXY COATED.
- REINFORCING STEEL NOTATION:

N.F.	- NEAR FACE	E.W.	- EACH WAY
F.F.	- FAR FACE	T.	- TOP
E.F.	- EACH FACE	B. OR	- BOTTOM

- CLEAR COVER TO REINFORCING STEEL SHALL BE:

i)	MEMBERS CAST AGAINST EARTH.	75 ± 20
ii)	MEMBERS CAST AGAINST SKIM SLAB.	60 ± 15
iii)	SLABS AND WALLS EXPOSED TO FLUID OR	50 ± 10
iv)	MEMBERS NOT EXPOSED.	40 ± 10

- ALL REINFORCING STEEL SHALL BE DETAILED, FABRICATED, PLACED AND SUPPORTED IN ACCORDANCE WITH REINFORCING STEEL INSTITUTE OF CANADA MANUAL OF STANDARD PRACTICE (1992) AND CSA A23.3 UNLESS OTHERWISE INDICATED.
- BARS MARKED CONTINUOUS SHALL BE DEVELOPED TO CLASS C TENSION LAP WHERE SPLICED.

AS BUILT

NOTE: REVISED "AS-BUILT" DRAWING. THIS DRAWING HAS BEEN REVISED TO INCORPORATE CHANGES AS INDICATED IN THE CONTRACTOR'S MARKED UP DRAWINGS. CHANGES DONE BY OWNER/OCWA WITHOUT THE CONSULTANT'S INVOLVEMENT ARE NOT INCLUDED ON THE DRAWINGS. CONTRACTOR'S DRAWINGS ARE NOT VERIFIED ON SITE BY ENGINEER. THE ENGINEER DOES NOT TAKE RESPONSIBILITY FOR INFORMATION ON THIS DRAWING THAT IS IN CONFLICT WITH THE EXISTING CONDITION DUE TO INACCURATE OR MISSING INFORMATION ON SOURCE DOCUMENTS PROVIDED.

CONCRETE:

- CONCRETE MATERIALS, MIXING, PLACING, CURING AND FORMWORK SHALL CONFORM TO THE REQUIREMENTS OF CAN3-A23.1-M90.
- TESTING OF CONCRETE MATERIALS AND HARDENED CONCRETE SHALL BE CARRIED OUT IN ACCORDANCE WITH THE REQUIREMENTS OF CAN3-A23.2-M90.
- CONCRETE CLASS SHALL BE AS FOLLOWS:

		STRENGTH (MPa)	EXPOSURE CLASS	MAXIMUM w/c RATIO	AIR CATEGORY
i)	TYPICAL UNLESS AS NOTED BELOW	30	F-1 S-3	0.40	1
ii)	UP TO 200 mm SLAB-ON-GRADE, FOOTINGS, OR FOUNDATION WALLS	25	C-4	0.50	2
iii)	BENCHING	30	F-1 S-3	0.45	1
iv)	SKIM SLAB, PIPE ENCASEMENT OR STRUCTURAL FILL	10	N/A	N/A	N/A

- FORMWORK SHALL CONFORM TO CSA STANDARD S269.3-M92 "FORMWORK FOR CONSTRUCTION PURPOSES".
- FORM TIES SHALL BE FREE OF DEVICES LEAVING METAL OR OTHER MATERIAL WITHIN 50 mm OF THE CONCRETE SURFACE.
- ALL CONCRETE IN WATERTIGHT STRUCTURES SHALL RECEIVE 10 DAYS OF MOISTURE CURING. ALL OTHER STRUCTURAL CONCRETE SHALL RECEIVE 7 DAYS OF MOISTURE CURING.
- CONCRETE WALLS SHALL BE POURED WITHOUT HORIZONTAL CONSTRUCTION JOINTS UNLESS OTHERWISE INDICATED ON THE DRAWINGS.
- ALL SURFACES OF CONSTRUCTION JOINTS SHALL BE SANDBLASTED TO EXPOSE COARSE AGGREGATE.
- ALL CONSTRUCTION JOINTS IN WATERTIGHT CONCRETE SHALL RECEIVE 225 mm PVC WATERSTOP.
- NO HOLES OTHER THAN THOSE DETAILED ON THE STRUCTURAL DRAWINGS OR SHOP DRAWINGS OR APPROVED BY THE ENGINEER WILL BE PERMITTED THROUGH CONCRETE WALLS, BEAMS, SLABS OR COLUMNS.
- CONFIRM LOCATION OF ALL OPENINGS, CONDUITS AND ANCHOR BOLTS PRIOR TO PLACING CONCRETE.
- CONCRETE WILL NOT BE PLACED UNTIL ALL REINFORCING WITHIN THE AREA TO BE POURED HAS BEEN PROPERLY INSTALLED AND INSPECTED BY THE ENGINEER.
- ELECTRICAL CONDUIT SHALL BE PLACED TO THE INTERIOR OF THE OUTSIDE MAT OF REINFORCING STEEL IN ALL CONCRETE WORK.

MASONRY:

- THE NOTES BELOW INDICATE ONLY THE MINIMUM STRUCTURAL REQUIREMENTS APPLICABLE TO MASONRY CONSTRUCTION. SEE ALSO THE ARCHITECTURAL DRAWINGS AND SPECIFICATIONS FOR REQUIREMENTS FOR MASONRY OTHER THAN STRUCTURAL.
- MASONRY SHALL BE CONSTRUCTED TO COMPLY WITH THE REQUIREMENTS OF CAN3-A371, UNLESS OTHERWISE SHOWN ON THE DRAWINGS.
- CONCRETE BLOCKS SHALL CONFORM TO THE REQUIREMENTS OF CSA STANDARD A165. BLOCKS FOR REINFORCED WALLS SHALL BE TYPE H/15/A/M, WHERE THE 15 MPa COMPRESSIVE STRENGTH IS BASED ON NET CROSS-SECTIONAL AREA.
- MASONRY MORTAR SHALL COMPLY WITH THE REQUIREMENTS OF CSA STANDARD A179. MASONRY MORTAR SHALL BE TYPE S AND SHALL HAVE A MINIMUM 28 DAY COMPRESSIVE STRENGTH OF 12.5 MPa.
- MASONRY GROUT SHALL COMPLY WITH THE FINE GROUT REQUIREMENTS OF CSA STANDARD A179. THE MINIMUM SLUMP SHALL BE 150 mm AND THE MINIMUM STRENGTH SHALL BE 20 MPa. PLACE GROUT IN LIFTS NOT GREATER THAN 1500 mm HIGH.
- ALL MASONRY WALLS SHALL BE REINFORCED HORIZONTALLY AND VERTICALLY TO RESIST SEISMIC LOADING AS INDICATED ON THE DRAWINGS. FILL ALL VOIDS THAT CONTAIN REINFORCING STEEL. GROUT IN VOIDS SHALL BE CONSOLIDATED BY THE USE OF SMALL DIAMETER, HIGH FREQUENCY VIBRATORS INSERTED INTO THE GROUT.
- NON-BEARING WALLS SHALL NOT BE BUILT TIGHT TO THE UNDERSIDE OF TRUSSES. LATERAL SUPPORT OF SUCH PARTITIONS SHALL BE PROVIDED BY BLOCKING ATTACHED TO THE TRUSS AS PER THE DETAILS ON THE DRAWINGS.
- PROVIDE EXTRA HEAVY DUTY, GALVANIZED "BLOC-TRUS" REINFORCING AT 400 mm CENTRES VERTICALLY IN ALL MASONRY WALLS. WIDTH OF "BLOC TRUS" SHALL BE 50 mm LESS THAN THE WALL THICKNESS. AT CORNERS AND WALL JUNCTIONS, USE PRE-FABRICATED CORNERS. MINIMUM SPLICE LENGTH SHALL BE 300 mm.
- PROVIDE BEARING PLATES AND ANCHORS FOR ALL BEAMS BEARING ON WALLS UNLESS OTHERWISE DETAILED ON THE DRAWINGS. ANCHORS FOR BASEPLATES AND/OR CONTINUOUS BEARING PLATES WILL BE SUPPLIED, LOOSE, WITH THREADED ENDS, OF THE LENGTHS SHOWN ON THE DRAWINGS. THEY SHALL BE EMBEDDED SOLIDLY WITH TYPE S MORTAR IN THE MASONRY UNITS.

STRUCTURAL STEEL

- STRUCTURAL STEEL, MATERIALS AND WORKMANSHIP SHALL CONFORM TO THE REQUIREMENTS OF CAN3-S16.1. ALL STRUCTURAL STEEL SHALL BE NEW, CONFORMING TO THE REQUIREMENTS OF CSA STANDARD G40.21. PLATES, SHAPES AND BAR SHALL BE GRADE 300W. HOLLOW SECTIONS SHALL BE GRADE 350W, CLASS C OR H.
- WELDING SHALL CONFORM TO THE REQUIREMENTS OF CSA STANDARD W59 AND TO BE UNDERTAKEN BY A FABRICATOR FULLY APPROVED BY THE CANADIAN WELDING BUREAU TO THE REQUIREMENTS OF THE LATEST ISSUE OF CSA STANDARD W47.1, DIVISION 1 OR DIVISION 2.1.
- ANCHORS FOR BASEPLATES OR CONTINUOUS WALL PLATES SHALL BE WITH THREADED ENDS. ANCHORS WELDED TO BASEPLATES OR CONTINUOUS WALL PLATES ARE NOT ACCEPTABLE.
- PROVIDE AT LEAST 2 - 6 mm DIAMETER HOLES IN ALL STEEL COMPONENTS, REQUIRED TO BE CAST IN CONCRETE, TO ENABLE COMPONENT TO BE FASTENED TO THE FORMWORK.
- PROVIDE 15 mm DIAMETER HOLES AT 600 mm c/c IN STEEL MEMBERS WHERE WOOD BLOCKING IS REQUIRED TO BE ATTACHED.
- WELDING SHALL CONFORM TO THE REQUIREMENTS OF CSA STANDARD W59 AND TO BE UNDERTAKEN BY A FABRICATOR FULLY APPROVED BY THE CANADIAN WELDING BUREAU TO THE REQUIREMENTS OF THE LATEST ISSUE OF CSA STANDARD W47.1, DIVISION 1 OR DIVISION 2.1.
- ALL H.S.S. SECTIONS SHALL BE AIR SEALED EACH END.
- NO HOLES SHALL BE MADE IN ANY STEEL MEMBER WITHOUT THE WRITTEN PERMISSION OF THE ENGINEER.
- ANCHORS FOR BASEPLATES OR CONTINUOUS WALL PLATES SHALL BE WITH THREADED ENDS. ANCHORS WELDED TO BASEPLATES OR CONTINUOUS WALL PLATES ARE NOT ACCEPTABLE.
- WHERE WALL PLATES OR PERIMETER ANGLES ARE REQUIRED TO BE CONTINUOUS, ANY SPLICES SHALL BE FIELD CONNECTED FOR A FORCE EQUAL TO 75% OF THE TENSILE CAPACITY OF THE PLATE OR ANGLE.
- PROVIDE 15 mm DIAMETER HOLES AT 600 mm c/c IN STEEL MEMBERS WHERE WOOD BLOCKING IS REQUIRED TO BE ATTACHED.
- OPEN WEB STEEL JOISTS SHALL BE PROVIDED WHERE SHOWN ON THE DRAWINGS TO SUPPORT TOTAL UNIFORM AND OTHER LOADS AS SHOWN ON THE DRAWINGS.
- WHERE JOISTS SPAN FROM ONE SIDE ONLY, A LINE DRAWN VERTICALLY THROUGH THE INTERSECTION OF THE CENTROID OF THE TOP CHORD AND THE CENTROID OF THE FIRST DIAGONAL SHALL COINCIDE WITH THE CENTRELINE OF THE BEAM WEB.
- JOISTS SHALL BE WELDED OR BOLTED TO SUPPORTING BEAM, OR IF BUILT INTO MASONRY, FIXED WITH ADEQUATE WALL ANCHORS.
- WELDS SHALL BE USED EACH SIDE OF SHOES. MINIMUM SIZE OF WELD SHALL BE 5 mm FILLET WELD HAVING A MINIMUM LENGTH OF 40 mm EACH SIDE.
- WELDING OF JOISTS SHALL BE PERFORMED ONLY BY WELDERS LICENSED BY THE CWB.
- JOISTS ON COLUMN LINES SHALL HAVE THEIR BOTTOM CHORDS DESIGNED AS A COMPRESSION MEMBER FOR THE LOADS INDICATED ON THE DRAWINGS.
- THE GEOMETRY OF THE JOISTS SHALL BE ARRANGED SUCH THAT THE PANEL POINTS OF ADJACENT JOISTS OCCUR IN THE SAME LOCATION.
- WOOD STUD, METAL STUD OR CONCRETE BLOCK, NON-LOAD BEARING WALLS, SHALL NOT BE BUILT TIGHT TO THE UNDERSIDE OF O.W.S.J.'S. PROVIDE A 20 mm SPACE BELOW AND AT THE SIDES OF EACH JOIST. THE SPACE SHALL BE FILLED WITH A COMPRESSIBLE, NON-COMBUSTIBLE MATERIAL. LATERAL SUPPORT OF THESE WALLS SHALL BE PROVIDED IN ACCORDANCE WITH DETAILS SHOWN ON THE DRAWINGS.
- EACH JOIST SHOE SHALL BE DESIGNED TO BE CAPABLE OF TRANSFERRING A FORCE OF 10 kN, PERPENDICULAR TO THE SPAN OF THE JOIST, FROM THE UNDERSIDE OF THE DECK TO THE TOP OF THE SUPPORTING BEAM OR WALL PLATE.
- DESIGN OF STEEL DECK SHALL BE IN ACCORDANCE WITH THE REQUIREMENTS OF CSA S136-M89.
- STEEL SHEET SHALL CONFORM TO GRADE "A", MINIMUM, IN ACCORDANCE WITH ASTM A446-M-91.
- RESISTANCE WELDING SHALL CONFORM WITH THE REQUIREMENTS OF THE CSA STANDARD W55.2. FABRICATOR SHALL BE QUALIFIED UNDER CSA STANDARD W55.3.
- METAL DECK SHALL HAVE A MINIMUM CORE NOMINAL THICKNESS OF 0.30 INCHES (22 GA).
- STEEL DECK SHALL HAVE A ZINC METAL COATING CONFORMING TO ASTM A525-73 DESIGNATION G90 APPLIED BY A HOT DIPPING PROCESS BEFORE FORMING.
- THE DECK SHALL SPAN A MINIMUM OF 2 SPANS AND SHALL BE ARRANGED TO BE CONTINUOUS OVER 3 SPANS WHERE POSSIBLE. END LAPS SHALL BE A MINIMUM OF 2".
- UNLESS SPECIFICALLY NOTED OTHERWISE ON THE DRAWINGS, THE DECK SHALL BE ANCHORED BY WELDING TO ALL SUPPORTING AND PARALLEL MEMBERS WITH 20 mm DIAMETER FUSION WELDS AT 450 mm c/c MAXIMUM. SIDE LAPS SHALL BE CLINCHED AT INTERVALS NOT EXCEEDING 600 mm.
- DECK SHALL BE DESIGNED AS A HORIZONTAL DIAPHRAGM WHERE SPECIFIED ON THE DRAWINGS FOR THE MINIMUM SHEAR AND DEFLECTION VALUES INDICATED.
- NO CEILING OR OTHER LOADS SHALL BE SUSPENDED FROM METAL DECK.

ALUMINUM

- ALUMINUM DESIGN, MATERIALS AND WORKMANSHIP SHALL CONFORM TO CAN3-S157.
- EXTRUDED AND DRAWN SHAPES WHICH ARE WELDED SHALL BE 6063-T6 OR 6061-T6 ALLOYS. WHERE MEMBERS ARE NOT WELDED 6063-T54 ALLOY MAY ALSO BE USED.
- WELDING SHALL BE IN ACCORDANCE WITH CAN3-S157 AND CSA STANDARD W59.2 AND SHALL BE CARRIED OUT BY A FABRICATOR QUALIFIED TO CSA STANDARD 47.2.
- ALUMINUM COMPONENTS SHALL NOT BE FASTENED SO AS TO BE IN DIRECT CONTACT WITH CONCRETE. SEPARATE USING BITUMINOUS PAINT OR NEOPRENE. ANCHOR BOLTS INTO CONCRETE SHALL BE STAINLESS STEEL, TO ASTM-A666, GRADE 316.
- WHERE MEMBER SIZES AND/OR CONNECTION DETAILS ARE NOT SHOWN, THE CONTRACTOR SHALL SUBMIT SHOP DRAWINGS SHOWING THESE DETAILS. THE DRAWINGS SHALL BEAR THE SIGNATURE AND STAMP OF A QUALIFIED PROFESSIONAL ENGINEER CERTIFYING THAT THE MEMBERS AND/OR CONNECTIONS ARE CAPABLE OF RESISTING THE LOADS GIVEN ON THE DRAWINGS OR SPECIFICATION.

ROUGH CARPENTRY AND PREFABRICATED WOOD TRUSSES

- UNLESS OTHERWISE SHOWN ON THE DRAWINGS, LUMBER SHALL CONFORM TO THE FOLLOWING:
  SOFTWOOD LUMBER TO CSA STANDARD 0141
  SOFTWOOD PLYWOOD TO CSA STANDARD 0151
  DOUGLAS FIR PLYWOOD TO CSA STANDARD 0121
- WOOD AND CONNECTION DESIGN SHALL CONFORM TO CSA 086. ALL LUMBER SHALL BE IDENTIFIED BY GRADE STAMP IN ACCORDANCE WITH THE NLGA STANDARD GRADING RULES FOR CANADIAN LUMBER, 1987 EDITION. ALL LUMBER SHALL BE SURFACED FOUR SIDES. ALL LUMBER SHALL BE KILN DRIED.
- ALL PLYWOOD SHALL CONFORM TO THE REQUIREMENTS OF CSA STANDARD 0121 OR CSA STANDARD 0151. ALL PLYWOOD SHALL BE DOUGLAS FIR OR SOFTWOOD SHEATHING PLYWOOD WITH EXTERIOR TYPE GLUE, SUPPLIED IN 1200 mm x 2400 mm SHEETS. ALL PLYWOOD SHEETS SHALL BE GRADE STAMPED. DIRECTION OF GRAIN OF OUTER PLYS TO BE PLACED AT RIGHT ANGLES TO TRUSSES.
- ALL EDGES OF PLYWOOD SHEETS SHALL BE NAILED TO SUPPORTING TRUSSES OR BLOCKING WITH 50 mm NAILS AT 150 mm o.c. NAIL PLYWOOD TO ALL INTERMEDIATE BEARINGS WITH 50 mm NAILS AT 300 mm o.c.
- PRE-FABRICATED TRUSSES SHALL BE DESIGNED BY THE MANUFACTURER IN ACCORDANCE WITH CODES SPECIFIED, FOR THE LOADS INDICATED ON THE DRAWINGS. SHOP DRAWINGS AND CALCULATIONS BEARING THE STAMP OF AN ENGINEER REGISTERED IN THE PROVINCE OF ONTARIO SHALL BE SUBMITTED TO THE OWNER FOR REVIEW.
- WEB CONFIGURATION, INDICATED ON THE DRAWINGS, MAY BE CHANGED TO SUIT MANUFACTURER'S DESIGN AND FABRICATION.
- LIVE LOAD DEFLECTION FOR ROOF TRUSSES SHALL NOT EXCEED L/360
- ROOF TRUSSES SHALL BE DESIGNED FOR A NET UPLIFT OF NOT LESS THAN THAT INDICATED ON DRAWINGS. PROVIDE ADEQUATE ANCHORING DEVICES AT THE TRUSS SUPPORT POINTS TO TRANSFER THE RESULTANT UPLIFT FORCES TO THE FRAMING BELOW.
- NON-LOAD BEARING MASONRY WALLS SHALL NOT BE BUILT UP TIGHT TO THE UNDERSIDE OF TRUSSES. PROVIDE MINIMUM OF 20 mm CLEARANCE USING CONNECTION DETAILS WHICH WILL BRACE THE WALL TOP, LATERALLY, BUT PERMIT VERTICAL MOVEMENT.
- TRUSS MEMBERS SHALL NOT BE CUT, DRILLED OR ALTERED IN ANY WAY.

LEGEND

Alum.	ALUMINUM
Alt.	ALTERNATE
c/w	COMPLETE WITH
T&B	TOP AND BOTTOM
BOT.	BOTTOM
c.j.	CONTROL JOINT OR CONSTRUCTION JOINT
col.	COLUMN
conc.	CONCRETE
cont.	CONTINUOUS
dia.	DIAMETER
dn.	DOWN
dwg.	DRAWING
E.W.	EACH WAY
ea.	EACH
ELEV.	ELEVATION
exist.	EXISTING
F.D.	FLOOR DRAIN
ext.	EXTERIOR
fdn.	FOUNDATION
fin.	FINISH
flr.	FLOOR
ftg.	FOOTING
galv.	HOT DIP GALVANIZED
horiz.	HORIZONTAL
ht.	HEIGHT
inv.	INVERT
jt.	JOINT
max.	MAXIMUM
min.	MINIMUM
o.c.	ON CENTRE
c/c	CENTRE TO CENTRE
pl.	PLATE
plwd.	PLYWOOD
P.T.F.E.	TEFLON
rad.	RADIUS
reinf.	REINFORCED
s.s.	STAINLESS STEEL
spec.	SPECIFICATION
stl.	STEEL
t.o.s.	TOP OF SLAB
t.o.w.	TOP OF WALL
t.o.c.	TOP OF CONCRETE
typ.	TYPICAL
wp.	WATERPROOF
wwf	WELDED WIRE FABRIC

No.	Date	Revision
4	MARCH/98	AS BUILT
3	SEPT. 28/95	ISSUED FOR TENDER
2	SEPT. 15/95	ISSUED FOR REVIEW
1	JAN. 16/95	ISSUED FOR M.O.E.E. APPROVAL

McNEELY ENGINEERING CONSULTANTS LTD.

Owner: TOWNSHIP OF OSNABRUCK

Project: INGLESIDE SEWAGE TREATMENT PLANT
O.C.W.A. SEWAGE WORKS PROJECT No. 40-0797

Title: GENERAL NOTES and LEGEND
STRUCTURAL

Design	F.J.P.	Scale	N.A.	Proj. No.	M2544-4	Dwg No.	S01
Drawn	JHOB	Check	S.T.R.	Date	AUG 30/95		

No.	Date	Revision
4	MARCH/98	AS BUILT
3	SEPT. 28/95	ISSUED FOR TENDER
2	SEPT. 15/95	ISSUED FOR REVIEW
1	JAN. 16/95	ISSUED FOR M.O.E.E. APPROVAL

McNEELY ENGINEERING CONSULTANTS LTD.

Owner: TOWNSHIP OF OSNABRUCK

Project: INGLESIDE SEWAGE TREATMENT PLANT
O.C.W.A. SEWAGE WORKS PROJECT No. 40-0797

Title: HEADWORKS
FOOTING, SLAB-ON-GRADE and SECTIONS

Design	S.D.M.	Scale	AS SHOWN	Proj. No.	M2544-4	Dwg No.
Drawn	[illegible]	Check	S.T.R.	Date	AUG 30/95	S02

NOTES:

- REFER TO GENERAL NOTES, DRAWING S01.
- CONCRETE STRENGTH IN FOOTINGS AND SLAB-ON-GRADE TO BE 25 MPa.
- CONCRETE STRENGTH IN RETAINING WALLS AND COLUMNS TO BE 30 MPa.
- ALL U/S OF FOOTINGS TO BE AT ELEV. 75.150 UNLESS SHOWN OTHERWISE.

AS BUILT

NOTE: REVISED "AS-BUILT" DRAWING. THIS DRAWING HAS BEEN REVISED TO INCORPORATE CHANGES AS INDICATED IN THE CONTRACTOR'S MARKED UP DRAWINGS. CHANGES DONE BY OWNER/OCWA WITHOUT THE CONSULTANT'S INVOLVEMENT ARE NOT INCLUDED ON THE DRAWINGS. CONTRACTOR'S DRAWINGS ARE NOT VERIFIED ON SITE BY ENGINEER. THE ENGINEER DOES NOT TAKE RESPONSIBILITY FOR INFORMATION ON THIS DRAWING THAT IS IN CONFLICT WITH THE EXISTING CONDITION DUE TO INACCURATE OR MISSING INFORMATION ON SOURCE DOCUMENTS PROVIDED.

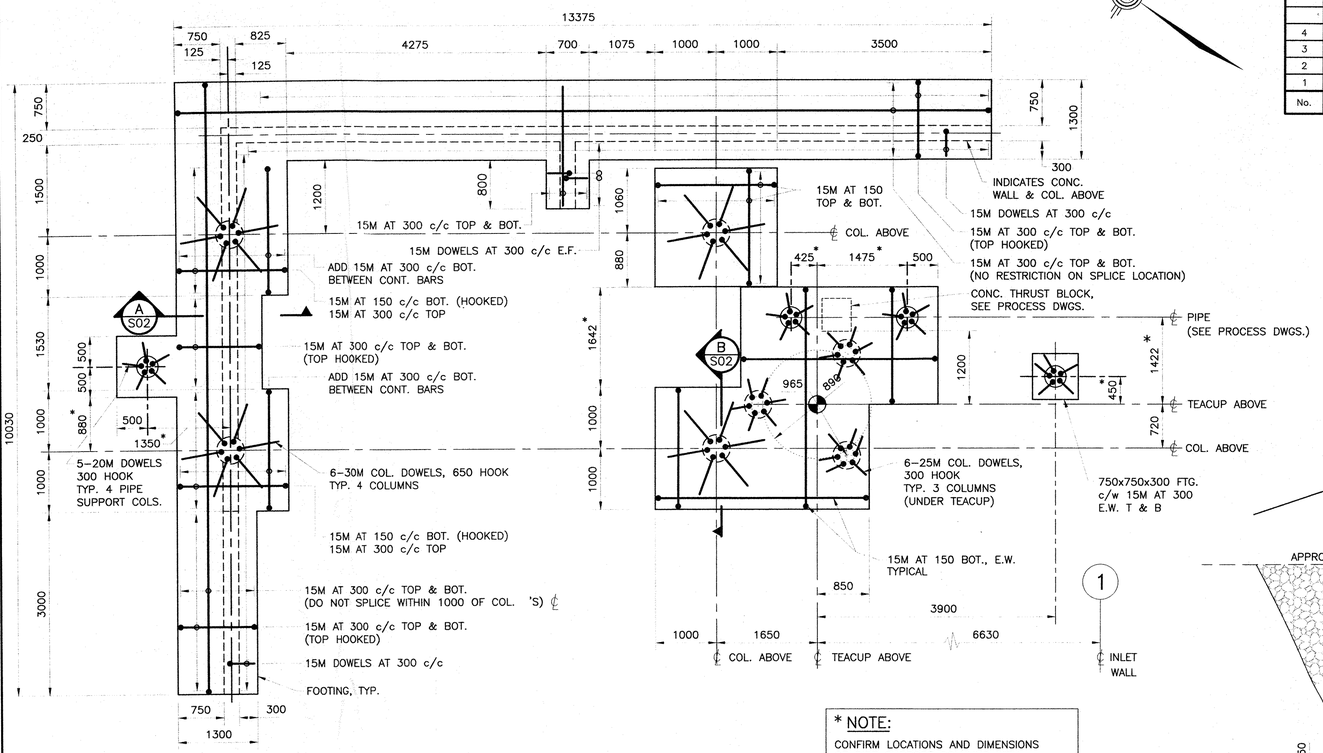

FOOTING PLAN
1:50

* NOTE:
CONFIRM LOCATIONS AND DIMENSIONS OF PIPE SUPPORT COLUMNS WITH MECHANICAL TRADES BEFORE PROCEEDING.

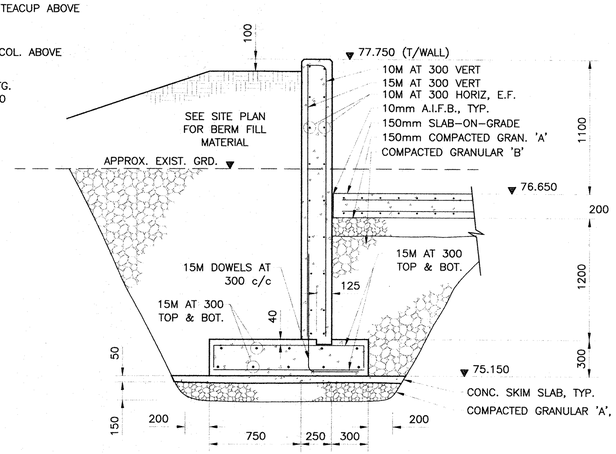

A S02 SECTION
1:25

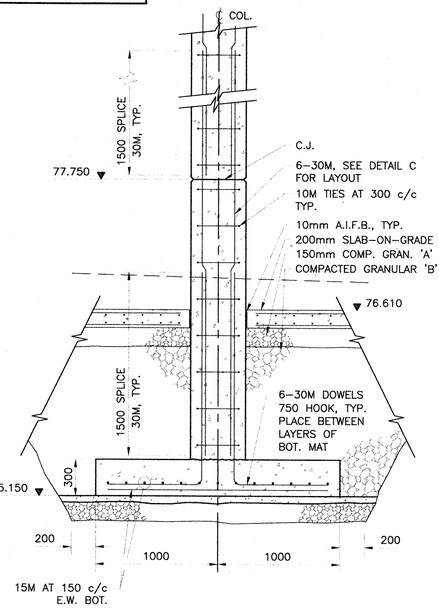

B S02 SECTION
1:25

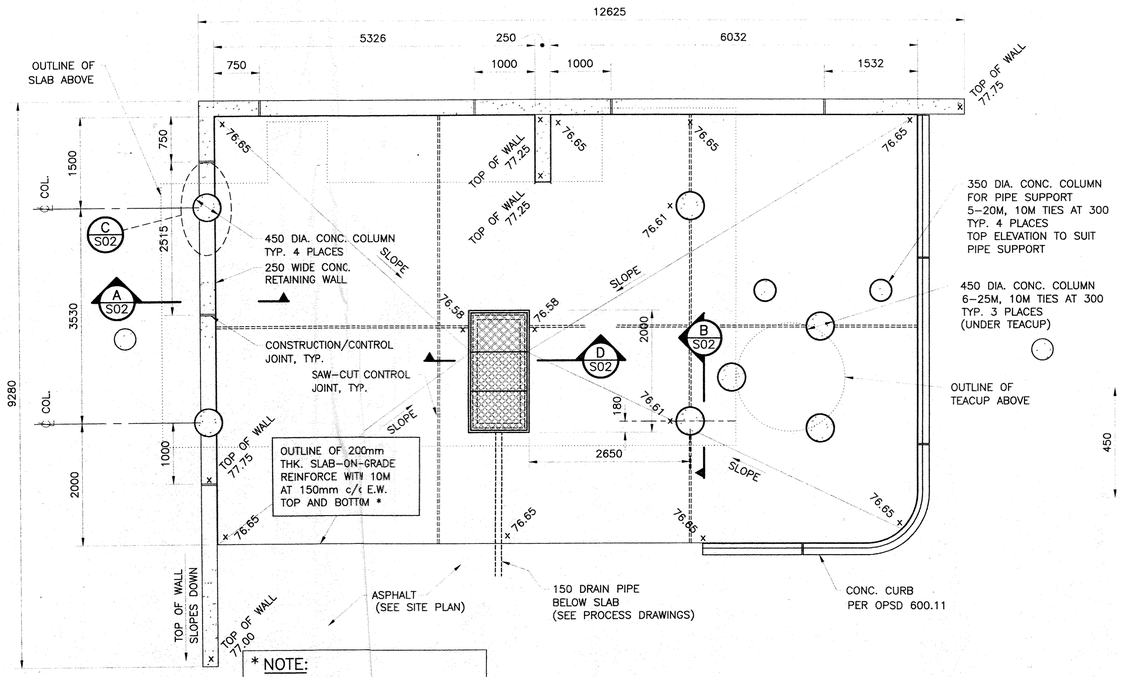

* NOTE:
SLABE-ON-GRADE TO ECIEVE EMERI-CRETE FLOOR HRDENER AT A RATE OF 6 Kg/m^2 APPLIED I ACCORDANCE WITH MANUFACTURER'S NSTRUCTIONS.

SLAB-ON-GRADE
1:50

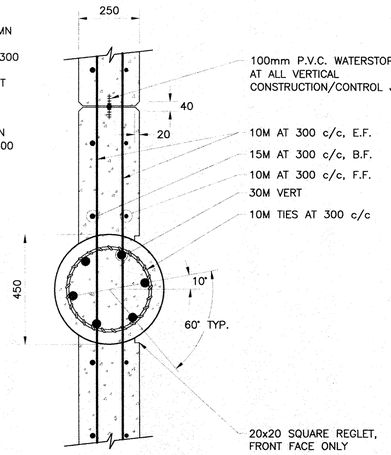

C S02 PLAN - DETAIL
1:50

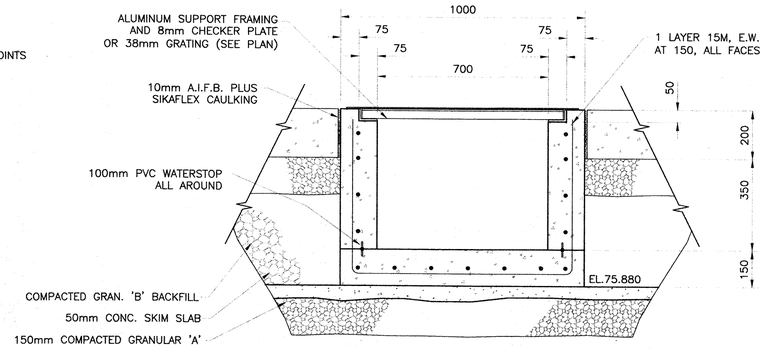

D S02 SECTION
1:12.5

NOTES:

- REFER TO GENERAL NOTES, DRAWING S01.
- CONCRETE STRENGTH TO BE 30 MPa.
- 2nd FLOOR SLAB HAS BEEN DESIGNED FOR:
  - i) SUPERIMPOSED DEAD LOAD OVER TROUGH FOOTPRINT AREA OF 14.4 kN/m^2
  - ii) ALLOWANCE FOR GATES, SCREENS, PIPES, DUCTS, COVERS, etc. OVER TROUGH FOOTPRINT AREA OF 3.6 kN/m^2
  - iii) LIVE LOAD OVER TROUGH FOOTPRINT AREA OF 3.6 kN/m^2
  - iv) LIVE LOAD OVER FLOOR AREA OF 3.6 kN/m.^{2}
- FINISHED CONCRETE SLAB ELEV. 81.247
- CONCRETE SLAB TO BE BROOM FINISHED TO PROVIDE NON-SLIP SURFACE.
- CO-ORDINATE TROUGH WALL CONSTRUCTION WITH MECHANICAL SUPPLIERS TO ENSURE PROPER FIT OF GATES, SCREENS, COVERS, ETC.

No.	Date	Revision
4	MARCH/98	AS BUILT
3	OCT/95	ISSUED FOR TENDER
2	SEPT. 15/95	ISSUED FOR REVIEW
1	JAN. 16/95	ISSUED FOR M.O.E.E. APPROVAL

AS BUILT

NOTE: REVISED "AS-BUILT" DRAWING. THIS DRAWING HAS BEEN REVISED TO INCORPORATE CHANGES AS INDICATED IN THE CONTRACTOR'S MARKED UP DRAWINGS. CHANGES DONE BY OWNER/OCWA WITHOUT THE CONSULTANT'S INVOLVEMENT ARE NOT INCLUDED ON THE DRAWINGS. CONTRACTOR'S DRAWINGS ARE NOT VERIFIED ON SITE BY ENGINEER. THE ENGINEER DOES NOT TAKE RESPONSIBILITY FOR INFORMATION ON THIS DRAWING THAT IS IN CONFLICT WITH THE EXISTING CONDITION DUE TO INACCURATE OR MISSING INFORMATION ON SOURCE DOCUMENTS PROVIDED.

McNEELY ENGINEERING CONSULTANTS LTD.

Owner: TOWNSHIP OF OSNABRUCK

Project: INGLESIDE SEWAGE TREATMENT PLANT
O.C.W.A. SEWAGE WORKS PROJECT No. 40-0797

Title: HEADWORKS
2nd FLOOR PLAN and SECTIONS

Design	F.J.P.	Scale	AS SHOWN	Proj. No.	M2544-4	Dwg No.
Drawn	[illegible]	Check	S.T.R.	Date	AUG 30/95	S03

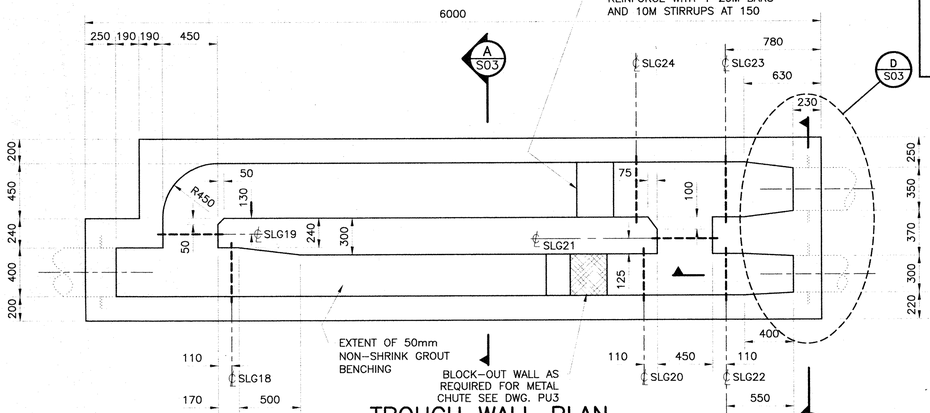

TROUGH WALL PLAN
1:25

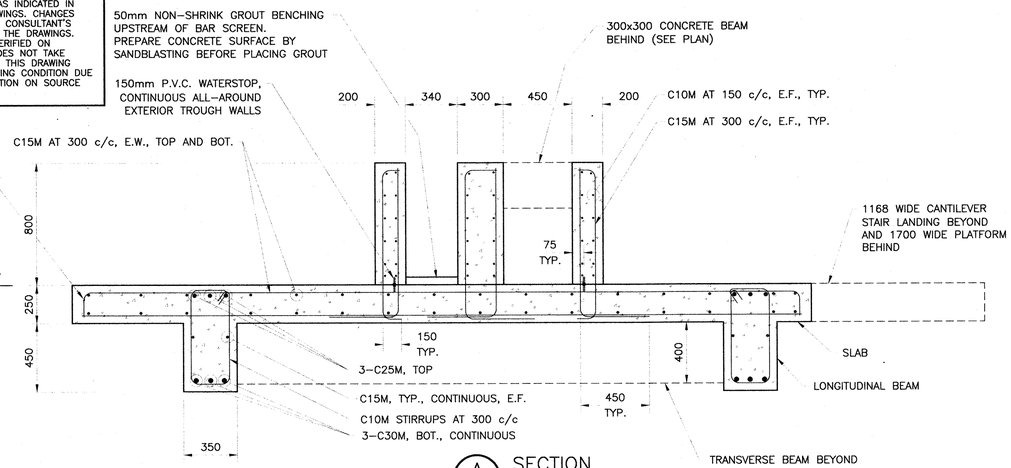

A S03 SECTION
1:20

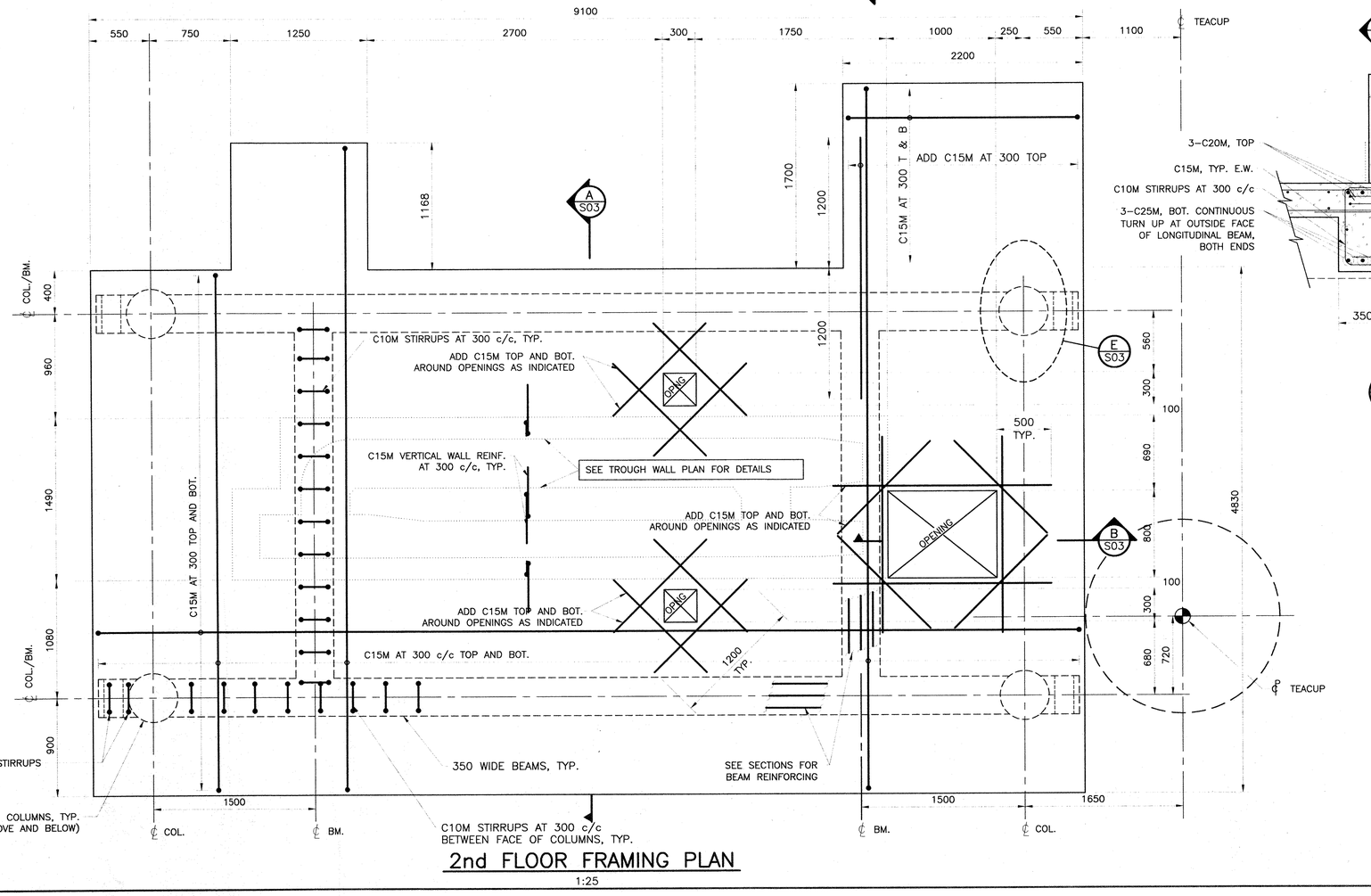

2nd FLOOR FRAMING PLAN
1:25

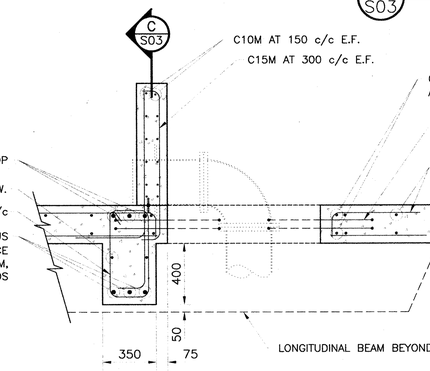

B S03 SECTION
1:20

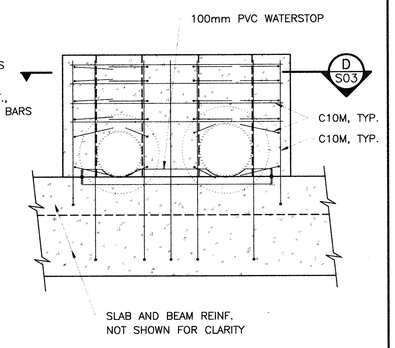

C S03 SECTION
1:20

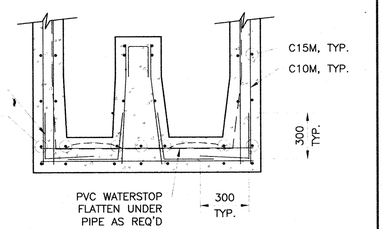

D S03 PLAN
1:50

E S03 SECTION
1:20

AS BUILT

NOTE: REVISED "AS-BUILT" DRAWING. THIS DRAWING HAS BEEN REVISED TO INCORPORATE CHANGES AS INDICATED IN THE CONTRACTOR'S MARKED UP DRAWINGS. CHANGES DONE BY OWNER/OCWA WITHOUT THE CONSULTANT'S INVOLVEMENT ARE NOT INCLUDED ON THE DRAWINGS. CONTRACTOR'S DRAWINGS ARE NOT VERIFIED ON SITE BY ENGINEER. THE ENGINEER DOES NOT TAKE RESPONSIBILITY FOR INFORMATION ON THIS DRAWING THAT IS IN CONFLICT WITH THE EXISTING CONDITION DUE TO INACCURATE OR MISSING INFORMATION ON SOURCE DOCUMENTS PROVIDED.

FOR FLOOR DRAINAGE IN THIS AREA SEE DWG. No. SSK-2 AND SSK-3 (ADDENDUM 3)

NOTES:

- REFER TO GENERAL NOTES ON DRAWING S01.
- CONCRETE STRENGTH TO BE 30 MPa.
- CONSTRUCTION JOINTS SHALL BE PLACED WHERE SHOWN, UNLESS OTHERWISE APPROVED.
- ALL OPENINGS FOR WEIRS AND OTHER PROCESS COMPONENTS TO BE FORMED IN ACCORDANCE WITH PU DRAWINGS.

No.	Date	Revision
4	MARCH/98	AS BUILT
3	OCT/95	ISSUED FOR TENDER
2	SEPT. 15/95	ISSUED FOR REVIEW
1	JAN. 16/95	ISSUED FOR M.O.E.E. APPROVAL

McNEELY ENGINEERING CONSULTANTS LTD.

Owner	TOWNSHIP OF OSNABRUCK				
Project	INGLESIDE SEWAGE TREATMENT PLANT O.C.W.A. SEWAGE WORKS PROJECT No. 40-0797				
Title	AERATION AND SECONDARY CLARIFIER TANK GROUP FOUNDATION SLAB LAYOUT and TYPICAL DETAILS				
Design	F.J.P.	Scale	1:150	Proj. No. M2544-4	Dwg No. S04
Drawn	RWB	Check	S.T.R.	Date AUG 30/95	

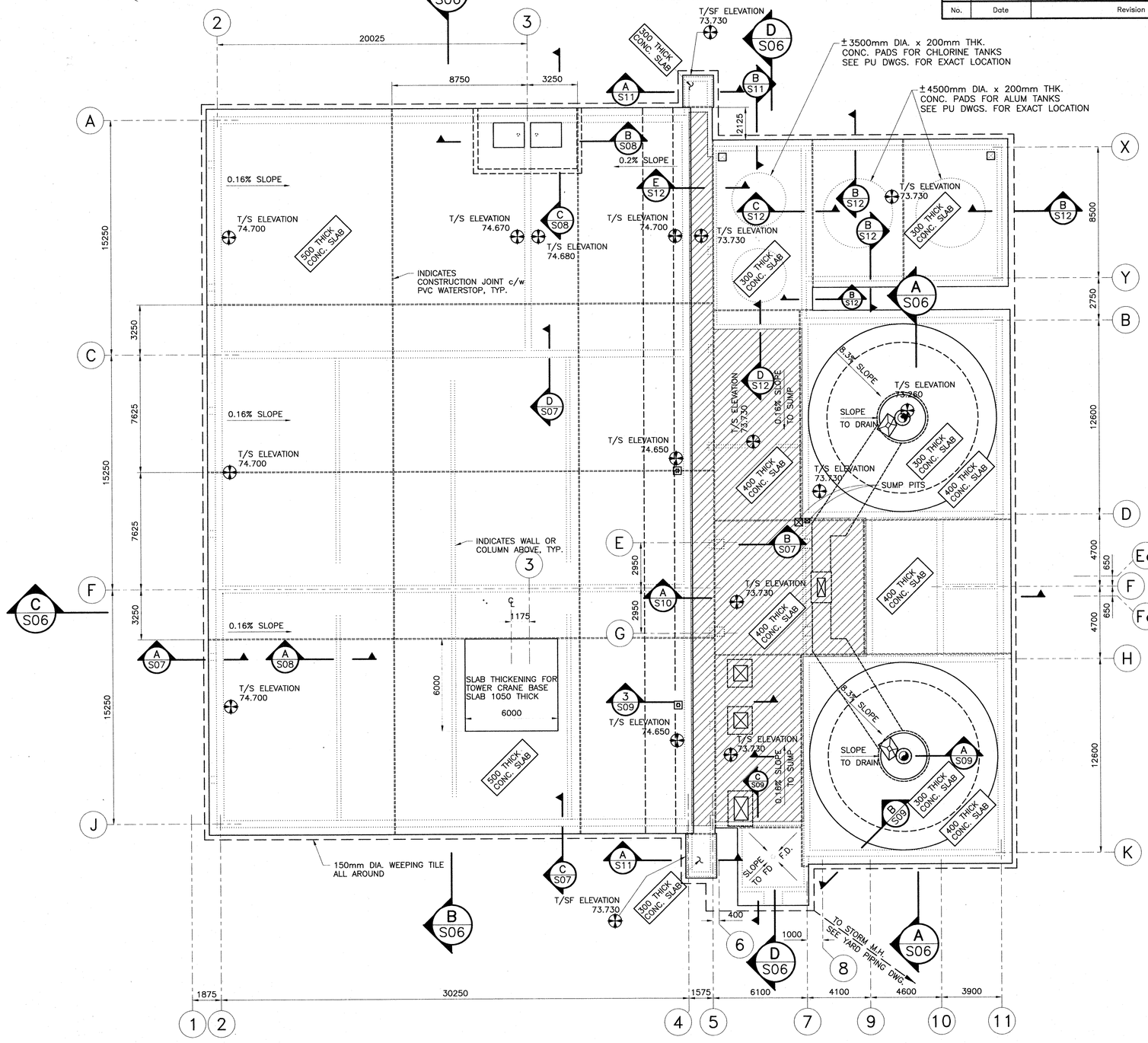

PLAN
1:150

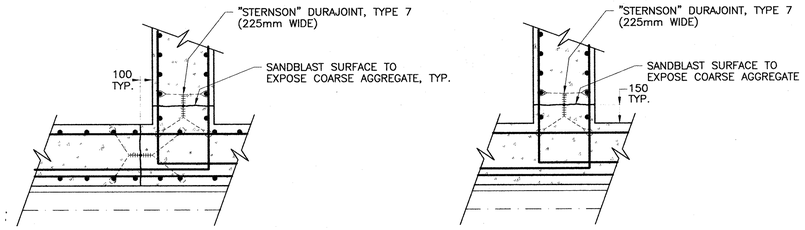

TYPICAL CONSTRUCTION/CONTRACTION JOINT DETAILS
N.T.S.

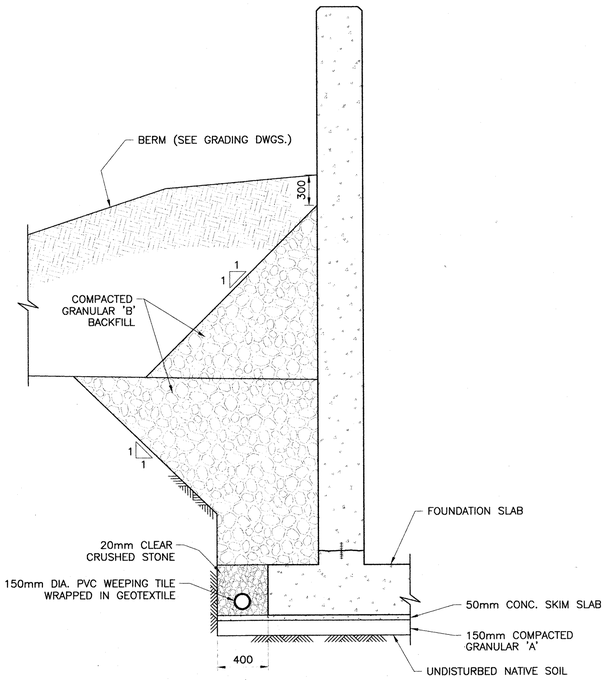

TYPICAL DETAIL (SECTION)
FOUNDATION PREPARATION AND BACKFILL
N.T.S.

AS BUILT

NOTE: REVISED "AS-BUILT" DRAWING. THIS DRAWING HAS BEEN REVISED TO INCORPORATE CHANGES AS INDICATED IN THE CONTRACTOR'S MARKED UP DRAWINGS. CHANGES DONE BY OWNER/OCWA WITHOUT THE CONSULTANT'S INVOLVEMENT ARE NOT INCLUDED ON THE DRAWINGS. CONTRACTOR'S DRAWINGS ARE NOT VERIFIED ON SITE BY ENGINEER. THE ENGINEER DOES NOT TAKE RESPONSIBILITY FOR INFORMATION ON THIS DRAWING THAT IS IN CONFLICT WITH THE EXISTING CONDITION DUE TO INACCURATE OR MISSING INFORMATION ON SOURCE DOCUMENTS PROVIDED.

NOTES:

- REFER TO GENERAL NOTES ON DRAWING S01.
- CONCRETE STRENGTH TO BE 30 MPa.
- FOR LOCATION OF CONSTRUCTION JOINTS SEE DRAWING S04. CONSTRUCTION JOINTS SHALL BE PLACED WHERE SHOWN, UNLESS OTHERWISE APPROVED. NO HORIZONTAL CONSTRUCTION JOINTS SHALL BE ALLOWED IN WALLS.
- ALL OPENINGS FOR WEIRS AND OTHER PROCESS COMPONENTS TO BE FORMED IN ACCORDANCE WITH PU DRAWINGS.

No.	Date	Revision
4	MARCH/98	AS BUILT
3	OCT/98	ISSUED FOR TENDER
2	SEPT. 15/95	ISSUED FOR REVIEW
1	JAN. 16/95	ISSUED FOR M.O.E.E. APPROVAL

McNEELY ENGINEERING CONSULTANTS LTD.

Owner	TOWNSHIP OF OSNABRUCK
Project	INGLESIDE SEWAGE TREATMENT PLANT O.C.W.A. SEWAGE WORKS PROJECT No. 40-0797
Title	AERATION AND SECONDARY CLARIFIER TANK GROUP WALL LAYOUT and TYPICAL DETAILS

Design	F.J.P.	Scale	1:150	Proj. No. M2544-4	Dwg No. S05
Drawn	[illegible]	Check	S.T.R.	Date AUG 30/95	

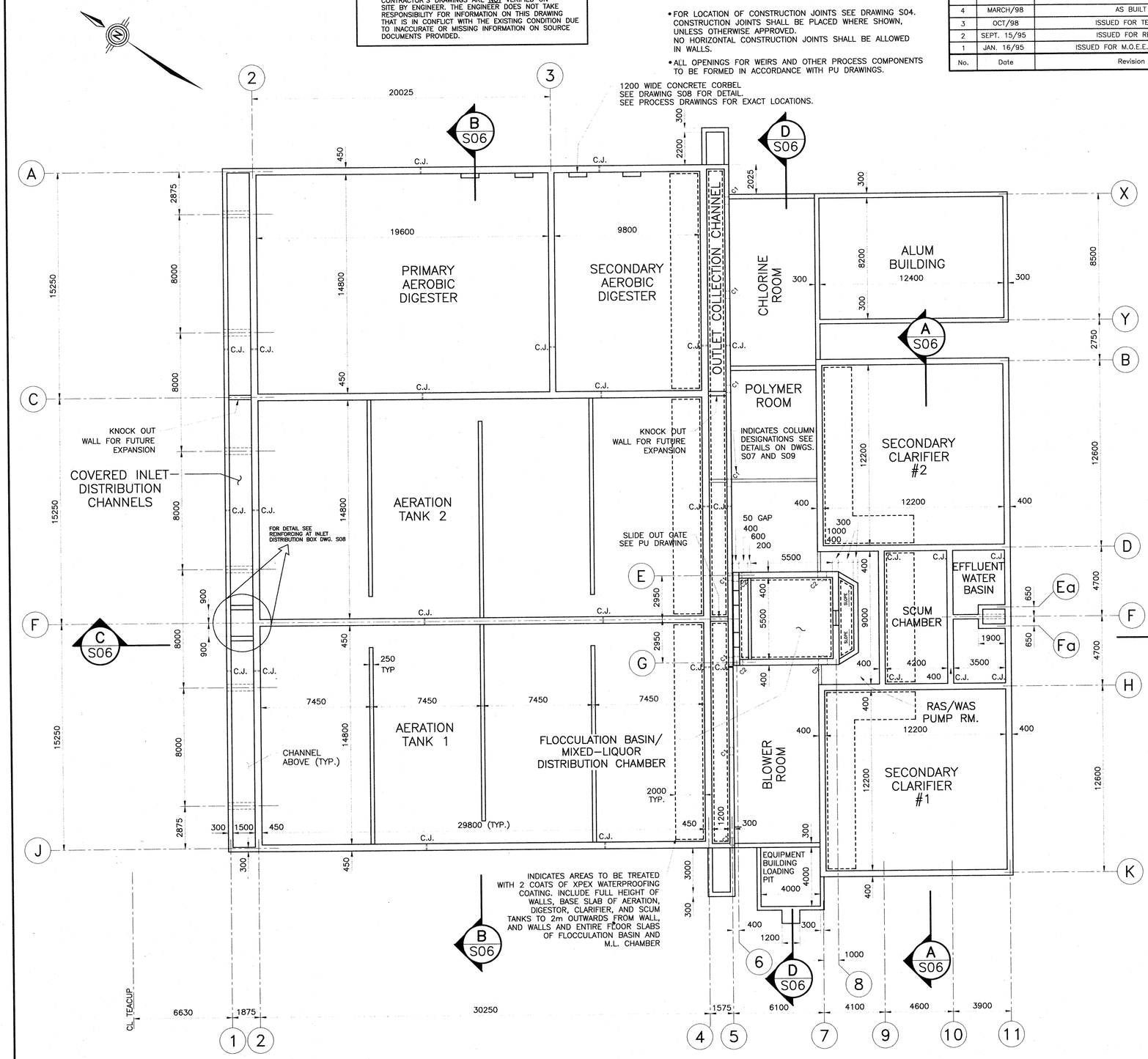

PLAN
1:150

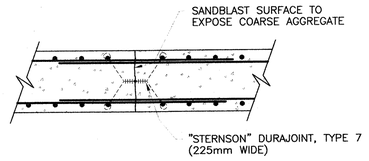

TYPICAL DETAIL (PLAN)
CONSTRUCTION/CONTRACTION JOINT IN WALL
N.T.S.

NOTE: TIE AND PROTECT WATERSTOPS TO PREVENT DISTORTION AND DAMAGE

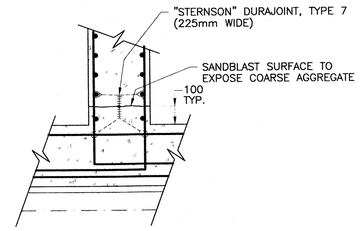

TYPICAL DETAIL (PLAN)
CONSTRUCTION/CONTRACTION JOINT IN WALL
N.T.S.

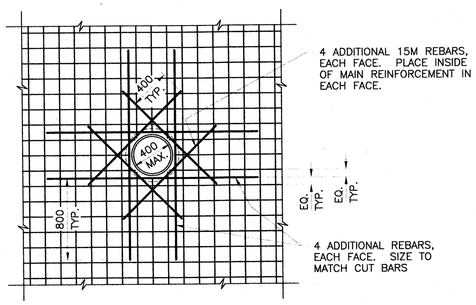

NOTE:

- ADDITIONAL REBARS MAY BE FIELD BENT NEAR TOP, BOTTOM OR AT CORNER OF WALL OR NEAR EDGE OF SLAB.
- WHERE PIPE INTERFERES WITH DOWELS AT BASE OF WALL OR IN SLAB, RE-POSITION DOWELS; DO NOT CUT DOWELS.
- WHERE PIPE OR PIPE FLANGE INTERSECTS PVC WATERSTOP, CUT WATERSTOP AND ADHERE TO PIPE FLANGE, EACH SIDE.

TYPICAL DETAIL: ADDITIONAL REINFORCING AROUND CAST-IN-PLACE PIPE
N.T.S.

No.	Date	Revision
4	MARCH/98	AS BUILT
3	OCT/95	ISSUED FOR TENDER
2	SEPT. 15/95	ISSUED FOR REVIEW
1	JAN. 16/95	ISSUED FOR M.O.E.E. APPROVAL

McNEELY ENGINEERING CONSULTANTS LTD.

Owner: TOWNSHIP OF OSNABRUCK

Project: INGLESIDE SEWAGE TREATMENT PLANT
O.C.W.A. SEWAGE WORKS PROJECT No. 40-0797

Title: AERATION and SECONDARY CLARIFIER TANK GROUP
SECTIONS

Design	F.J.P.	Scale	AS SHOWN	Proj. No.	M2544-4	Dwg No.
Drawn	RMB	Check	S.T.R.	Date	AUG 30/95	S06

AS BUILT

NOTE: REVISED "AS-BUILT" DRAWING. THIS DRAWING HAS BEEN REVISED TO INCORPORATE CHANGES AS INDICATED IN THE CONTRACTOR'S MARKED UP DRAWINGS. CHANGES DONE BY OWNER/OCWA WITHOUT THE CONSULTANT'S INVOLVEMENT ARE NOT INCLUDED ON THE DRAWINGS. CONTRACTOR'S DRAWINGS ARE NOT VERIFIED ON SITE BY ENGINEER. THE ENGINEER DOES NOT TAKE RESPONSIBILITY FOR INFORMATION ON THIS DRAWING THAT IS IN CONFLICT WITH THE EXISTING CONDITION DUE TO INACCURATE OR MISSING INFORMATION ON SOURCE DOCUMENTS PROVIDED.

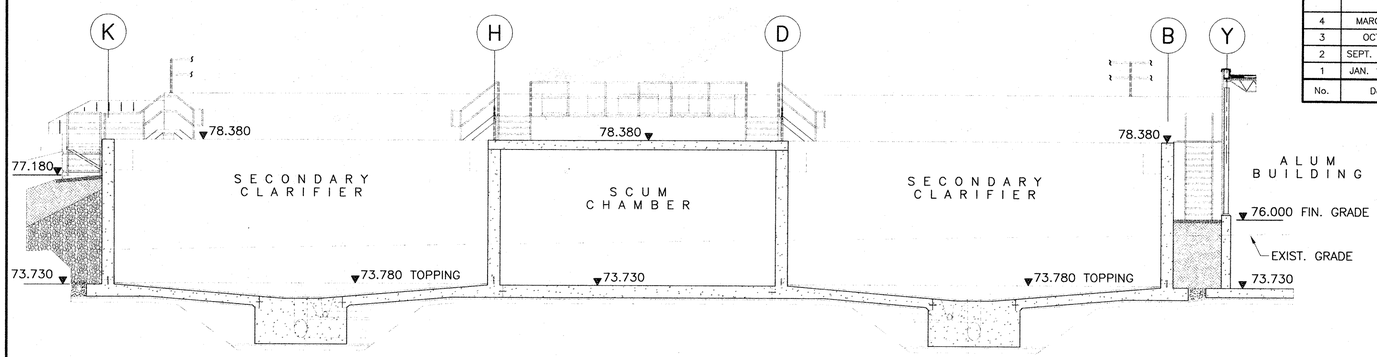

SECTION A-A
1:100

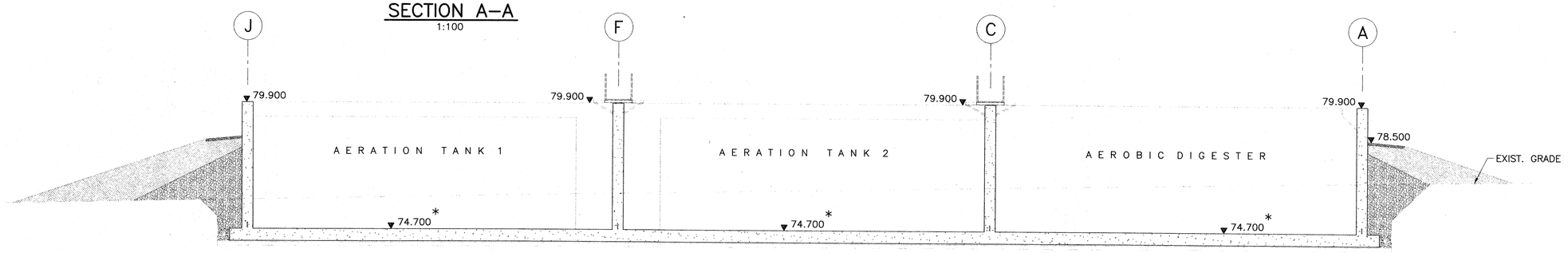

SECTION B-B
1:100

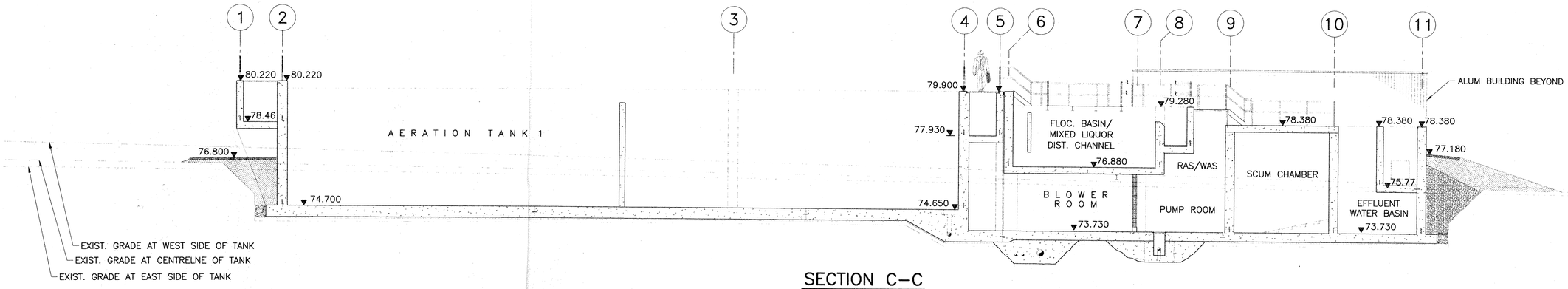

SECTION C-C
1:100

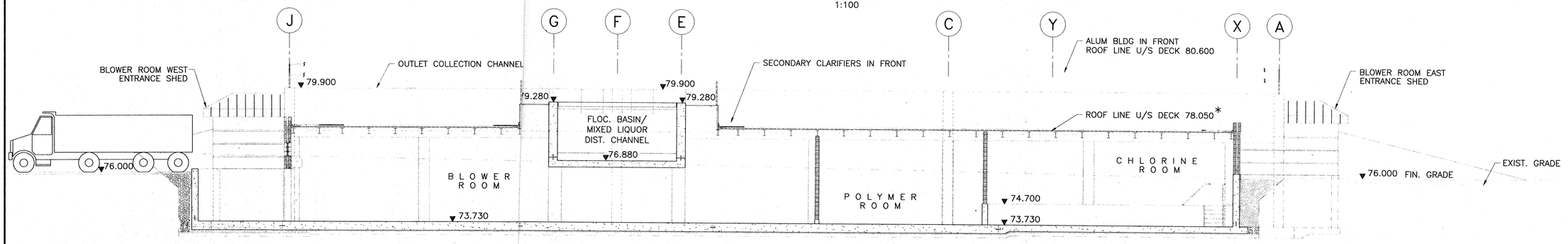

SECTION D-D
1:100

0000

No.	Date	Revision
4	MARCH/98	AS BUILT
3	OCT/95	ISSUED FOR TENDER
2	SEPT. 15/95	ISSUED FOR REVIEW
1	JAN. 16/95	ISSUED FOR M.O.E.E. APPROVAL

McNEELY ENGINEERING CONSULTANTS LTD.

Owner: TOWNSHIP OF OSNABRUCK

Project: INGLESIDE SEWAGE TREATMENT PLANT
O.C.W.A. SEWAGE WORKS PROJECT No. 40-0797

Title: AERATION and DIGESTER TANKS
WALL and SLAB REINFORCEMENT

Design	S.T.R.	Scale	AS SHOWN	Proj. No.	M2544-4	Dwg No.
Drawn	[illegible]	Check	S.D.M.	Date	AUG 30/95	S07

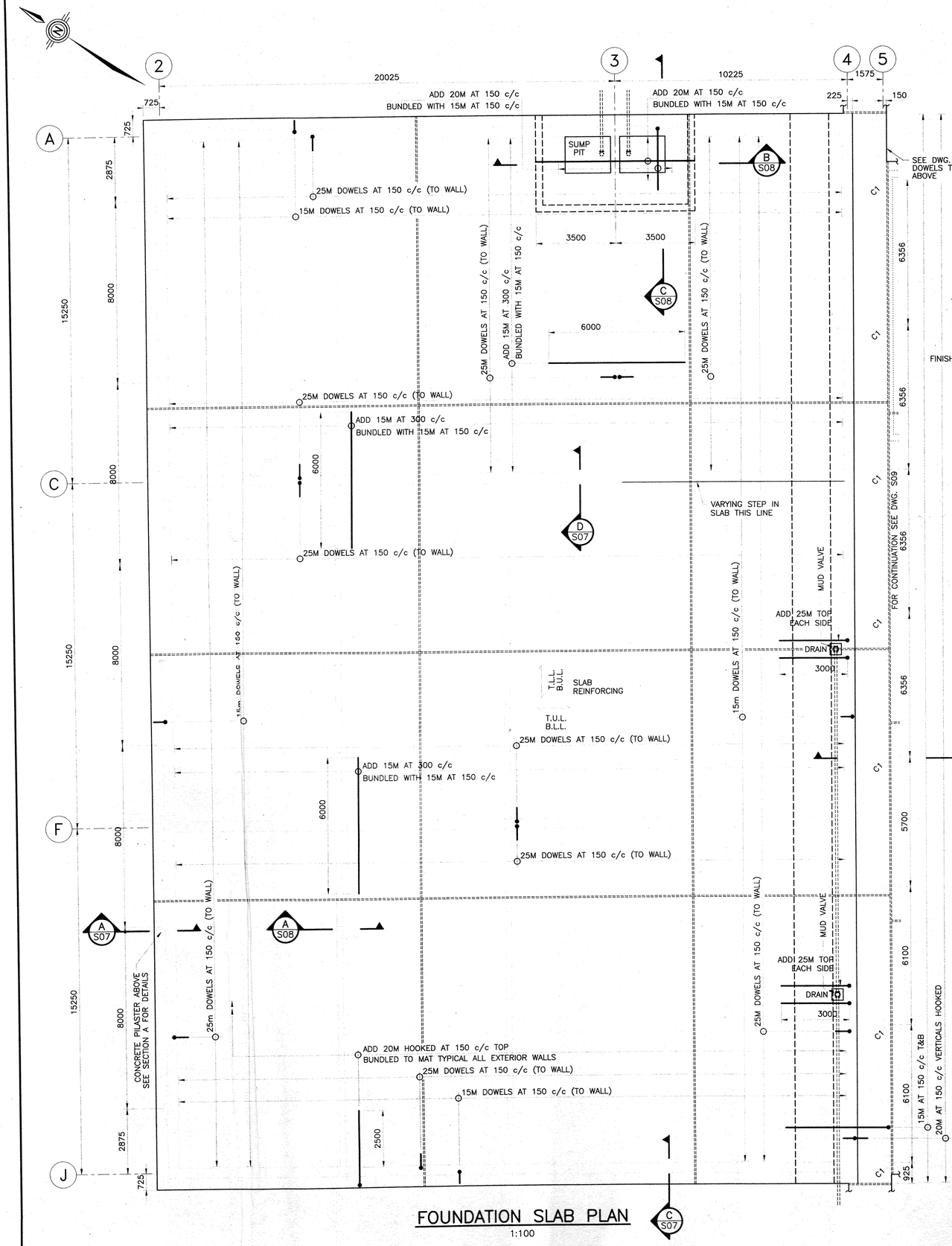

FOUNDATION SLAB PLAN
1:100

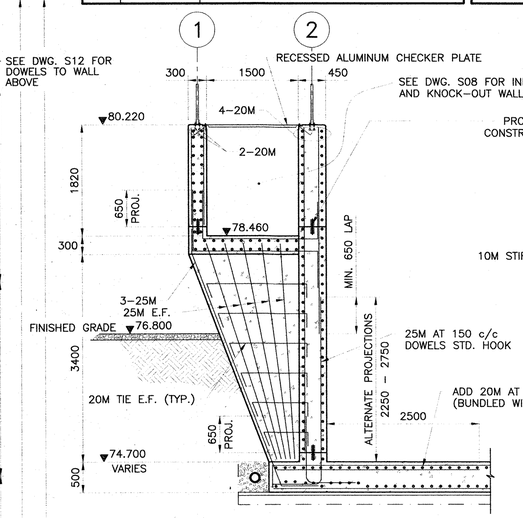

A S07 SECTION
1:50

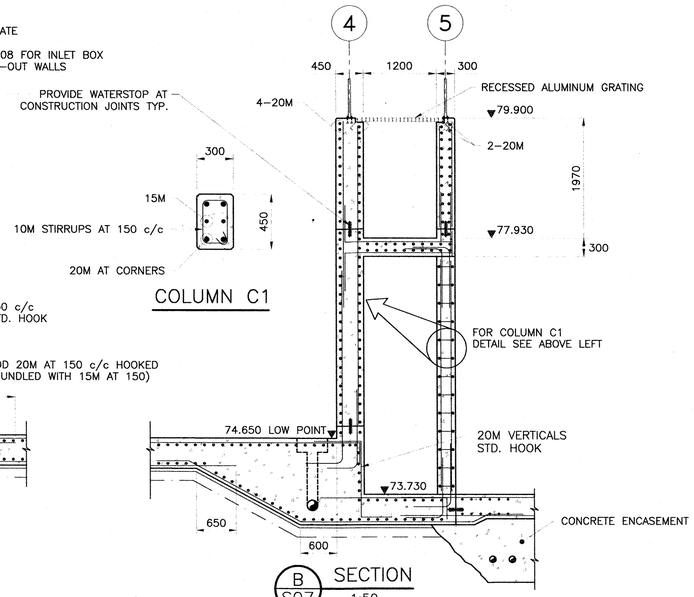

B S07 SECTION
1:50

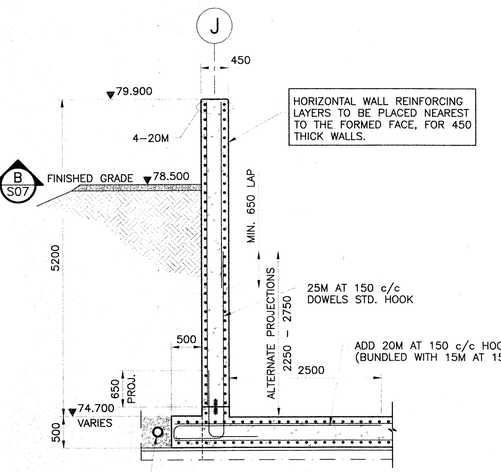

C S07 SECTION
1:50

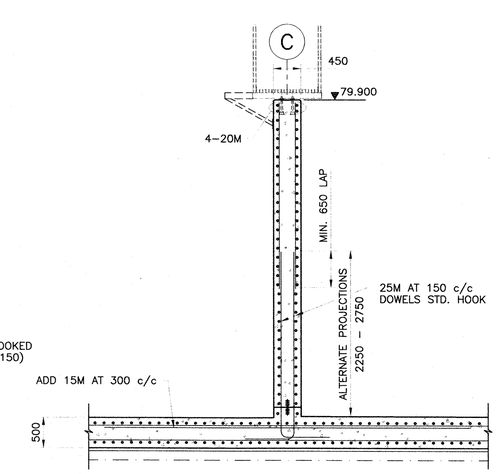

D S07 SECTION
1:50

NOTES:

- REFER TO GENERAL NOTES ON DRAWING S01.
- TOP OF SLAB HIGH POINT DATUM ELEVATION IS 74.700. SLOPE SLAB TYPICALLY TO SUMP PITS AND DRAINS. REFER TO DWG. S04 AND SECTIONS FOR ELEVATIONS
- CONCRETE SLAB IS 500mm THICK REINFORCED WITH 15M AT 150 c/c T&B E.W. CONTINUOUS BY LAPPING 650mm TYPICAL U.N.O. SEE DRAWING FOR ADDED REINFORCING.
- ALL WALL REINFORCING TO BE 15M AT 150 c/c E.W. EACH FACE, U.N.O.. SEE DRAWING S08 FOR ADDED REINFORCING AT WALL INTERSECTIONS AND CORNERS.
- SUSPENDED CHANNEL SLABS TO BE 300mm THICK REINFORCED WITH 15M AT 150c/c T&B E.W.. SEE SECTIONS FOR ELEVATIONS AND DETAILS.

AS BUILT

NOTE: REVISED "AS-BUILT" DRAWING. THIS DRAWING HAS BEEN REVISED TO INCORPORATE CHANGES AS INDICATED IN THE CONTRACTOR'S MARKED UP DRAWINGS. CHANGES DONE BY OWNER/OCWA WITHOUT THE CONSULTANT'S INVOLVEMENT ARE NOT INCLUDED ON THE DRAWINGS. CONTRACTOR'S DRAWINGS ARE NOT VERIFIED ON SITE BY ENGINEER. THE ENGINEER DOES NOT TAKE RESPONSIBILITY FOR INFORMATION ON THIS DRAWING THAT IS IN CONFLICT WITH THE EXISTING CONDITION DUE TO INACCURATE OR MISSING INFORMATION ON SOURCE DOCUMENTS PROVIDED.

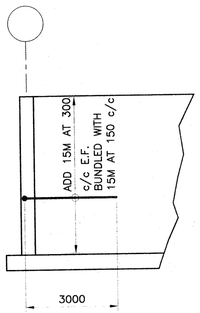

ELEVATION A
1:100

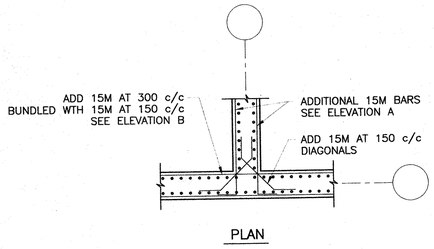

TYPICAL 450 WALL INTERSECTION REINFORCEMENT
1:25

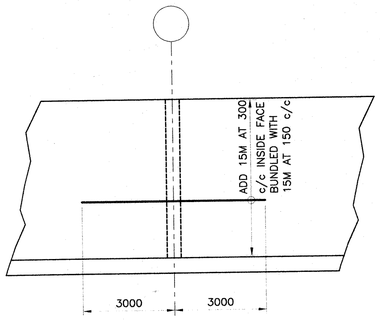

ELEVATION B
1:100

No.	Date	Revision
4	MARCH/98	AS BUILT
3	OCT/95	ISSUED FOR TENDER
2	SEPT. 15/95	ISSUED FOR REVIEW
1	JAN. 16/95	ISSUED FOR M.O.E.E. APPROVAL

McNEELY ENGINEERING CONSULTANTS LTD.

Owner	TOWNSHIP OF OSNABRUCK				
Project	INGLESIDE SEWAGE TREATMENT PLANT O.C.W.A. SEWAGE WORKS PROJECT No. 40-0797				
Title	AERATION and DIGESTER TANKS SECTIONS and DETAILS				
Design	S.T.R.	Scale	AS SHOWN	Proj. No. M2544-4	Dwg No. S08
Drawn	RHB	Check	S.D.M.	Date AUG 30/95	

AS BUILT

NOTE: REVISED "AS-BUILT" DRAWING. THIS DRAWING HAS BEEN REVISED TO INCORPORATE CHANGES AS INDICATED IN THE CONTRACTOR'S MARKED UP DRAWINGS. CHANGES DONE BY OWNER/OCWA WITHOUT THE CONSULTANT'S INVOLVEMENT ARE NOT INCLUDED ON THE DRAWINGS. CONTRACTOR'S DRAWINGS ARE NOT VERIFIED ON SITE BY ENGINEER. THE ENGINEER DOES NOT TAKE RESPONSIBILITY FOR INFORMATION ON THIS DRAWING THAT IS IN CONFLICT WITH THE EXISTING CONDITION DUE TO INACCURATE OR MISSING INFORMATION ON SOURCE DOCUMENTS PROVIDED.

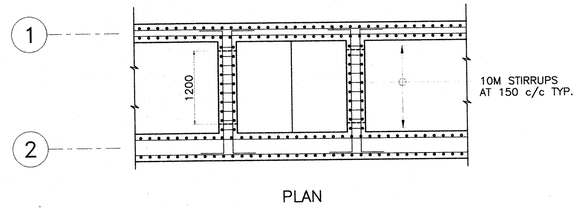

PLAN

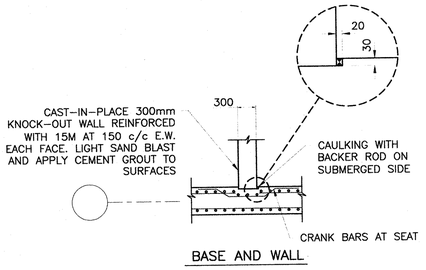

BASE AND WALL

TYPICAL - KNOCK-OUT WALL DETAIL
1:50

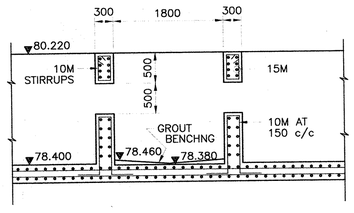

ELEVATION

REINFORCING AT INLET DISTRIBUTION BOX
1:50

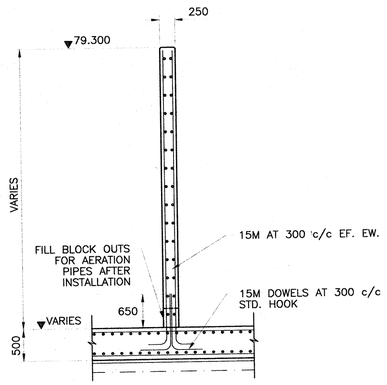

A S08 SECTION
1:50

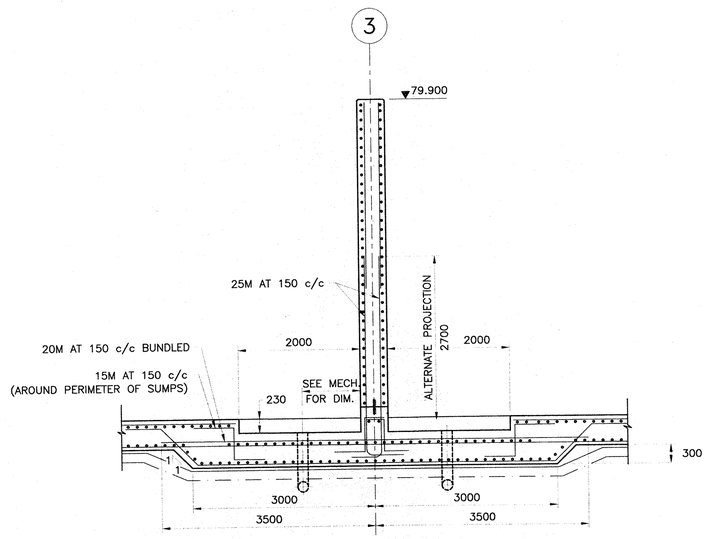

B S08 SECTION
1:50

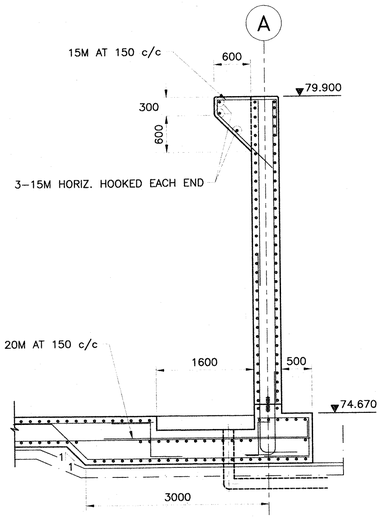

C S08 SECTION
1:50

AS BUILT

NOTE: REVISED "AS-BUILT" DRAWING. THIS DRAWING HAS BEEN REVISED TO INCORPORATE CHANGES AS INDICATED IN THE CONTRACTOR'S MARKED UP DRAWINGS. CHANGES DONE BY OWNER/OCWA WITHOUT THE CONSULTANT'S INVOLVEMENT ARE NOT INCLUDED ON THE DRAWINGS. CONTRACTOR'S DRAWINGS ARE NOT VERIFIED ON SITE BY ENGINEER. THE ENGINEER DOES NOT TAKE RESPONSIBILITY FOR INFORMATION ON THIS DRAWING THAT IS IN CONFLICT WITH THE EXISTING CONDITION DUE TO INACCURATE OR MISSING INFORMATION ON SOURCE DOCUMENTS PROVIDED.

No.	Date	Revision
4	MARCH/98	AS BUILT
3	OCT/95	ISSUED FOR TENDER
2	SEPT. 15/95	ISSUED FOR REVIEW
1	JAN. 16/95	ISSUED FOR M.O.E.E. APPROVAL

McNEELY ENGINEERING CONSULTANTS LTD.

Owner: TOWNSHIP OF OSNABRUCK

Project: INGLESIDE SEWAGE TREATMENT PLANT
O.C.W.A. SEWAGE WORKS PROJECT No. 40-0797

Title: SECONDARY CLARIFIER AND FLOCCULATION BASIN GROUP
PLANS and SECTIONS

Design	S.D.M.	Scale	AS SHOWN	Proj. No.	M2544-4	Dwg No.
Drawn	[illegible]	Check	S.T.R.	Date	AUG 30/95	S09

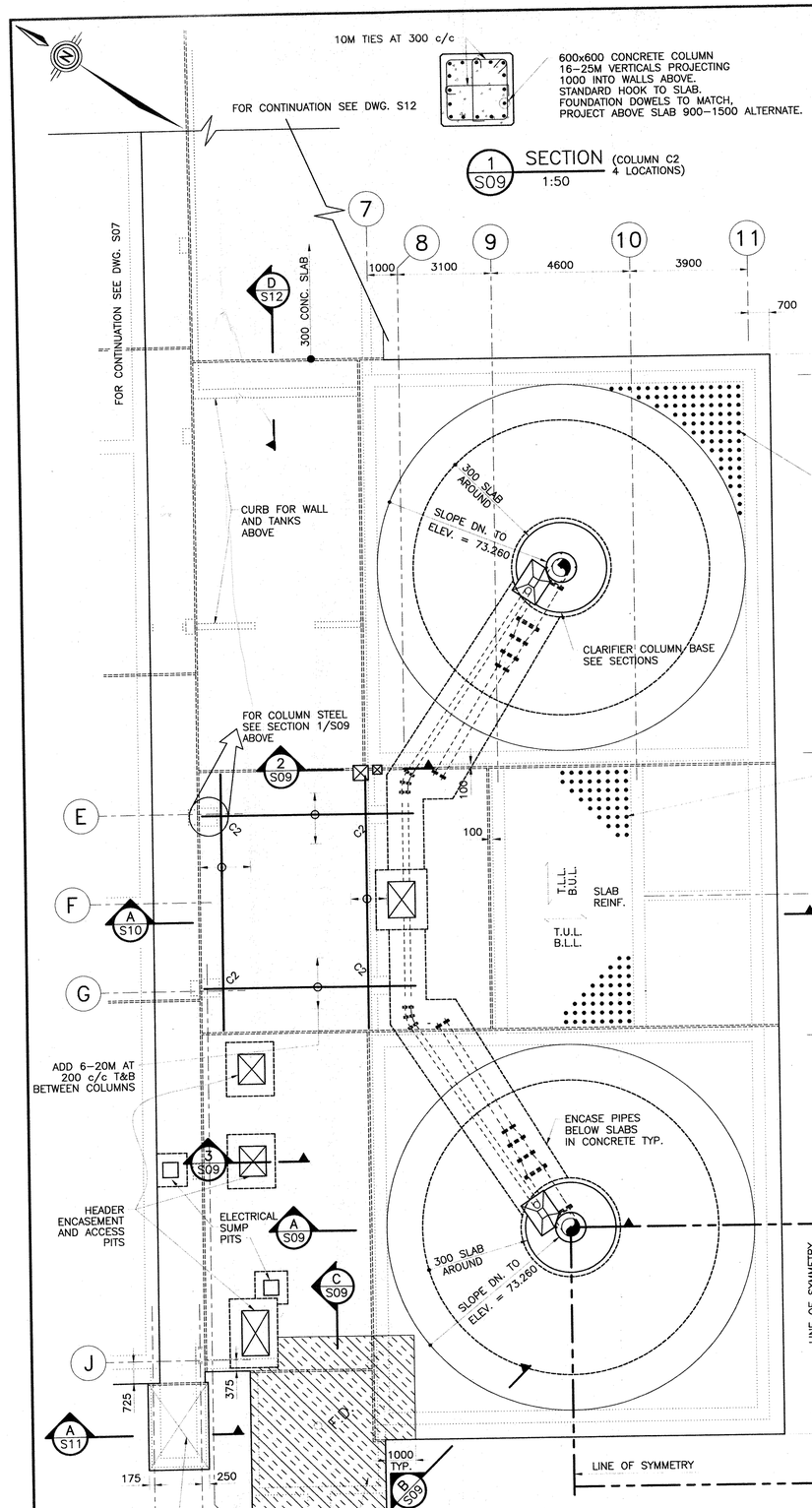

FOUNDATION SLAB PLAN

1:100

1. TOP OF SLAB ELEVATION 73.730 UNLESS NOTED OTHERWISE.
2. CONCRETE SLAB TO BE 400mm THICK TYPICAL UNLESS NOTED OTHERWISE REINFORCE WITH 15M AT 200 c/c T&B E.W. U.N.O..
3. FOR WALL REINFORCING AND DOWELS SEE SECTIONS.
4. LEAVE SLABS INTENTIONALLY ROUGH WHICH ARE TO RECIEVE A TOPPING OR BENCHING.
5. ALL UNDER SLAB PIPING SHALL BE INSTALLED AND BACKFILLED WITH CONCRETE ENCASEMENT BEFORE CONSTRUCTING SLABS

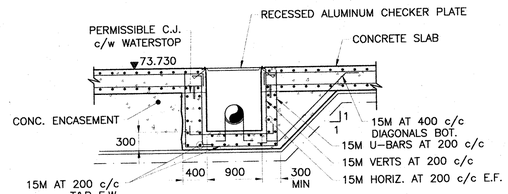

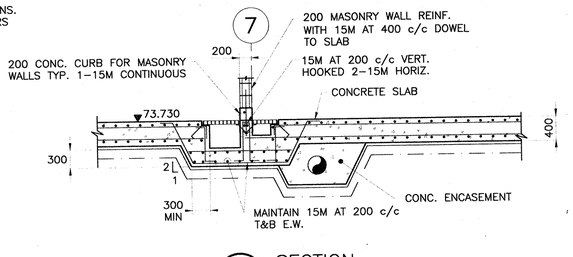

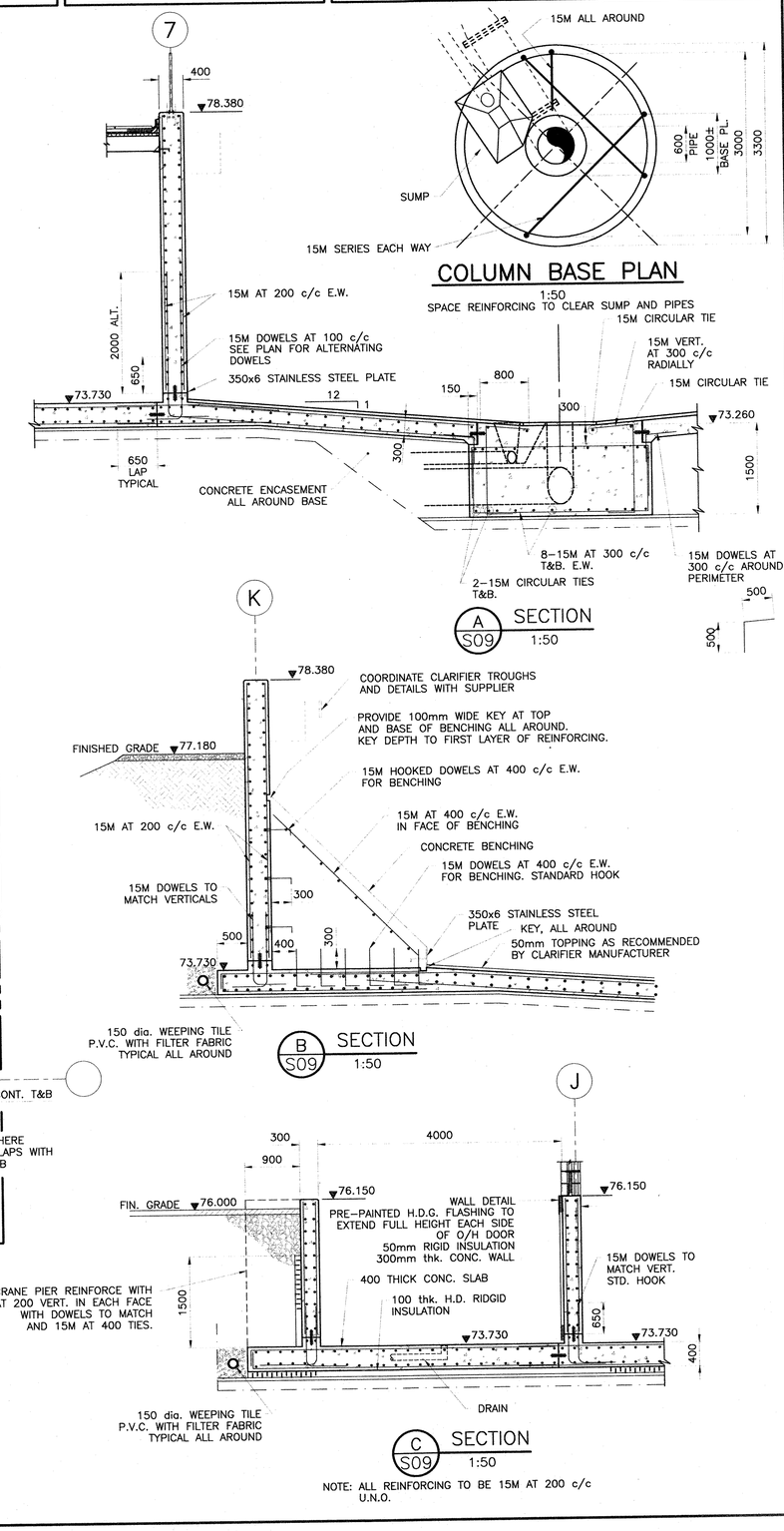

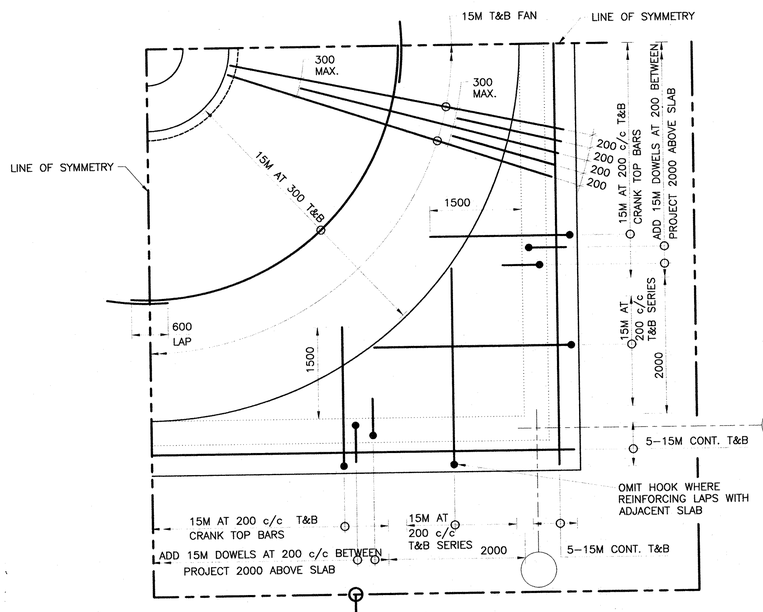

CONCRETE FLOOR SLABS ARE TO BE SLOPED TO SUMPS AND PROVIDE WITH CAST-IN TROUGH AS SHOWN ON SSK-2 AND SSK-3.

NOTE: ALL REINFORCING TO BE 15M AT 200 c/c U.N.O.

AS BUILT

NOTE: REVISED "AS-BUILT" DRAWING. THIS DRAWING HAS BEEN REVISED TO INCORPORATE CHANGES AS INDICATED IN THE CONTRACTOR'S MARKED UP DRAWINGS. CHANGES DONE BY OWNER/OCWA WITHOUT THE CONSULTANT'S INVOLVEMENT ARE NOT INCLUDED ON THE DRAWINGS. CONTRACTOR'S DRAWINGS ARE NOT VERIFIED ON SITE BY ENGINEER. THE ENGINEER DOES NOT TAKE RESPONSIBILITY FOR INFORMATION ON THIS DRAWING THAT IS IN CONFLICT WITH THE EXISTING CONDITION DUE TO INACCURATE OR MISSING INFORMATION ON SOURCE DOCUMENTS PROVIDED.

No.	Date	Revision
4	MARCH/98	AS BUILT
3	OCT/95	ISSUED FOR TENDER
2	SEPT. 15/95	ISSUED FOR REVIEW
1	JAN. 16/95	ISSUED FOR M.O.E.E. APPROVAL

McNEELY ENGINEERING CONSULTANTS LTD.

Owner: TOWNSHIP OF OSNABRUCK

Project: INGLESIDE SEWAGE TREATMENT PLANT
O.C.W.A. SEWAGE WORKS PROJECT No. 40-0797

Title: BLOWER, PUMP and CHEMICAL ROOMS
PLANS and SECTIONS

Design	S.D.M.	Scale	AS SHOWN	Proj. No.	M2544-4	Dwg No.
Drawn	[illegible]	Check	S.T.R.	Date	AUG 30/95	S10

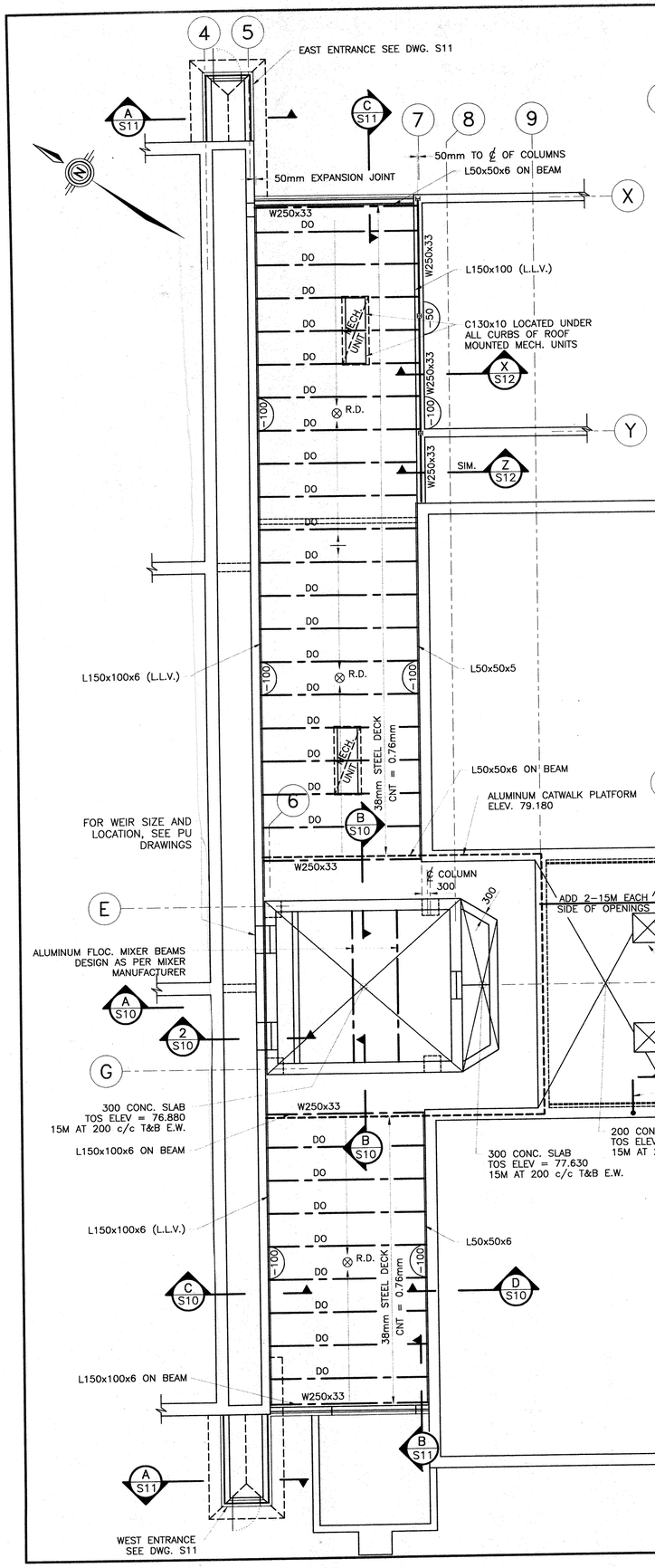

1 / S10 PLAN 1:50 (8 CORNER LOCATIONS)

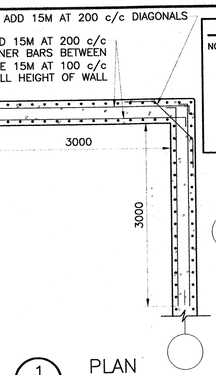

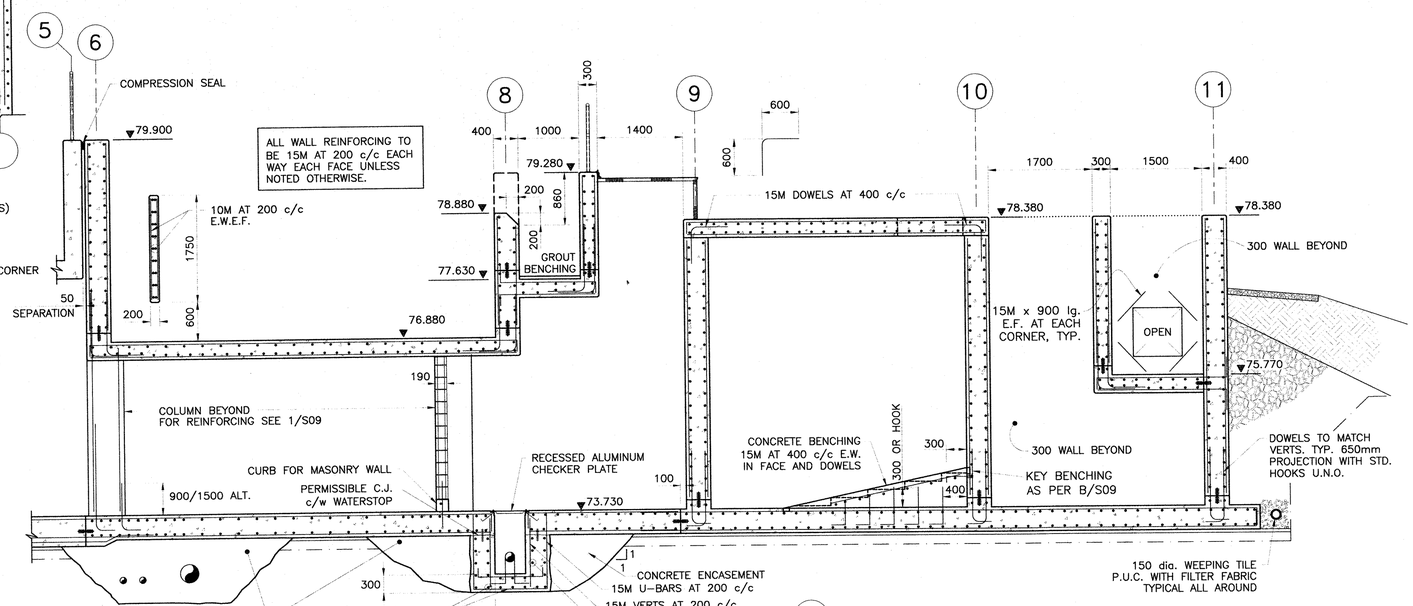

A / S10 SECTION 1:50

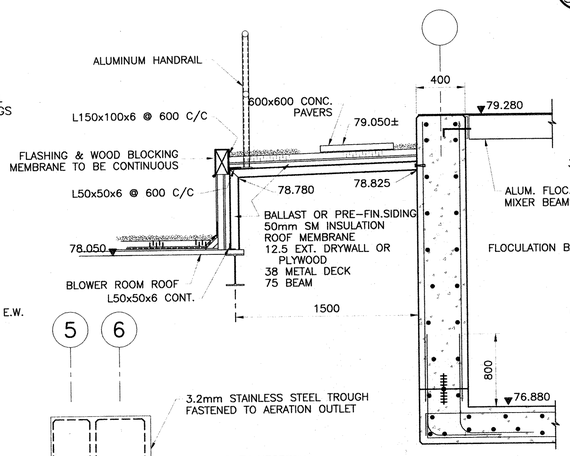

B / S10 SECTION 1:25

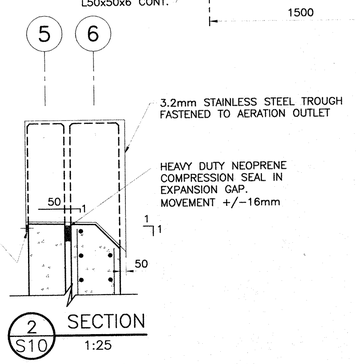

2 / S10 SECTION 1:25

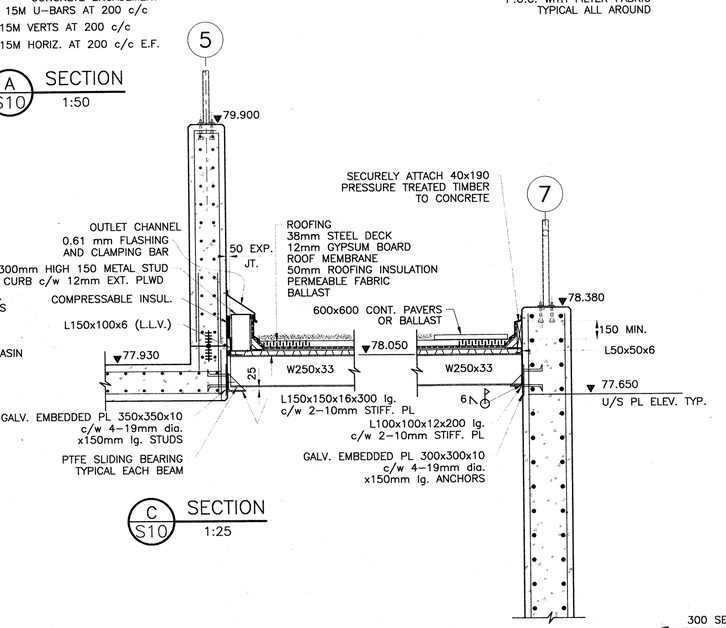

C / S10 SECTION 1:25

D / S10 SECTION 1:25

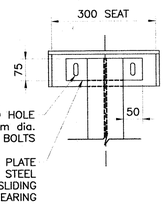

BEARING PLAN
N.T.S.
BEARINGS TO BE PLACED LEVEL. WELD TO EMBEDDED PLATE ALL AROUND.

ROOF FRAMING PLAN
1:100

1. UNDERSIDE OF ROOF DECK HIGH POINT DATUM ELEVATION 78.050 SLOPE ROOF 100mm TO DRAINS MARKED THUS. (-100)
2. ROOF DESIGN LIVE LOAD IS 4.8 kPa, SUPERIMPOSED DEAD LOAD IS 1.0 kPa.
3. ROOF BEAMS AT EXPANSION JOINT LOCATION TO BEAR ON ELASTOMER/TEFLON SLIDING BEARINGS. SEE BEARING TABLE THIS DWG.
4. ROOF DRAINS TO BE ANCON RD-100-CH WITH CAST IRON DOME OR APPROVED EQUIVALENT.

ROOF BEAM BEARINGS

DEAD LOAD	10 kN
TOTAL LOAD	30 kN
MAX. MOVEMENT	12mm EACH WAY
MAX. ROTATION	0.01
No. / SIZE	31 / 75x75

LOADS ARE UNFACTORED SERVICE

0000

AS BUILT

NOTE: REVISED "AS-BUILT" DRAWING. THIS DRAWING HAS BEEN REVISED TO INCORPORATE CHANGES AS INDICATED IN THE CONTRACTOR'S MARKED UP DRAWINGS. CHANGES DONE BY OWNER/OCWA WITHOUT THE CONSULTANT'S INVOLVEMENT ARE NOT INCLUDED ON THE DRAWINGS. CONTRACTOR'S DRAWINGS ARE NOT VERIFIED ON SITE BY ENGINEER. THE ENGINEER DOES NOT TAKE RESPONSIBILITY FOR INFORMATION ON THIS DRAWING THAT IS IN CONFLICT WITH THE EXISTING CONDITION DUE TO INACCURATE OR MISSING INFORMATION ON SOURCE DOCUMENTS PROVIDED.

No.	Date	Revision
4	MARCH/98	AS BUILT
3	OCT/95	ISSUED FOR TENDER
2	SEPT. 15/95	ISSUED FOR REVIEW
1	JAN. 16/95	ISSUED FOR M.O.E.E. APPROVAL

McNEELY ENGINEERING CONSULTANTS LTD.

Owner: TOWNSHIP OF OSNABRUCK

Project: INGLESIDE SEWAGE TREATMENT PLANT
O.C.W.A. SEWAGE WORKS PROJECT No. 40-0797

Title: BLOWER and CHEMICAL ROOM ENTRANCES
ELEVATIONS, SECTIONS and DETAILS

Design	S.D.M.	Scale	AS SHOWN	Proj. No.	M2544-4	Dwg No.
Drawn		Check	S.T.R.	Date	AUG 30/95	S11

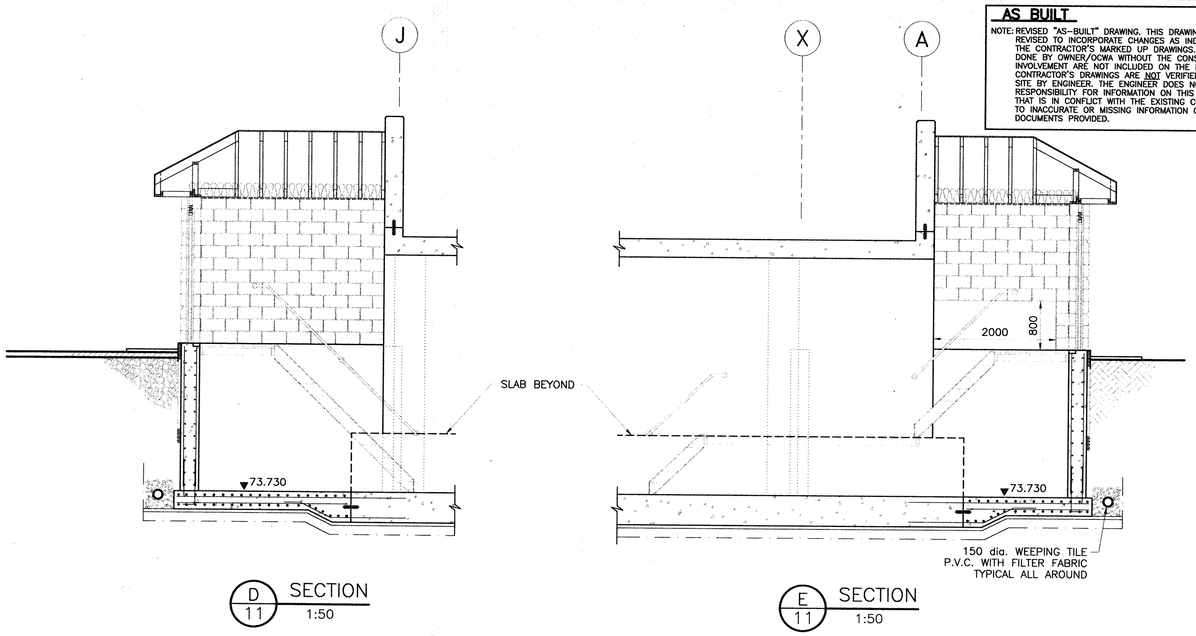

D/11 SECTION 1:50

E/11 SECTION 1:50

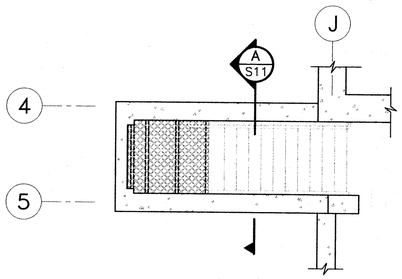

WEST ENTRANCE PLAN
1:50

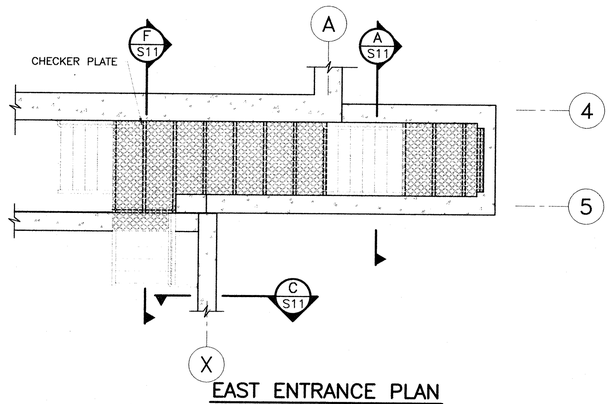

EAST ENTRANCE PLAN
1:50

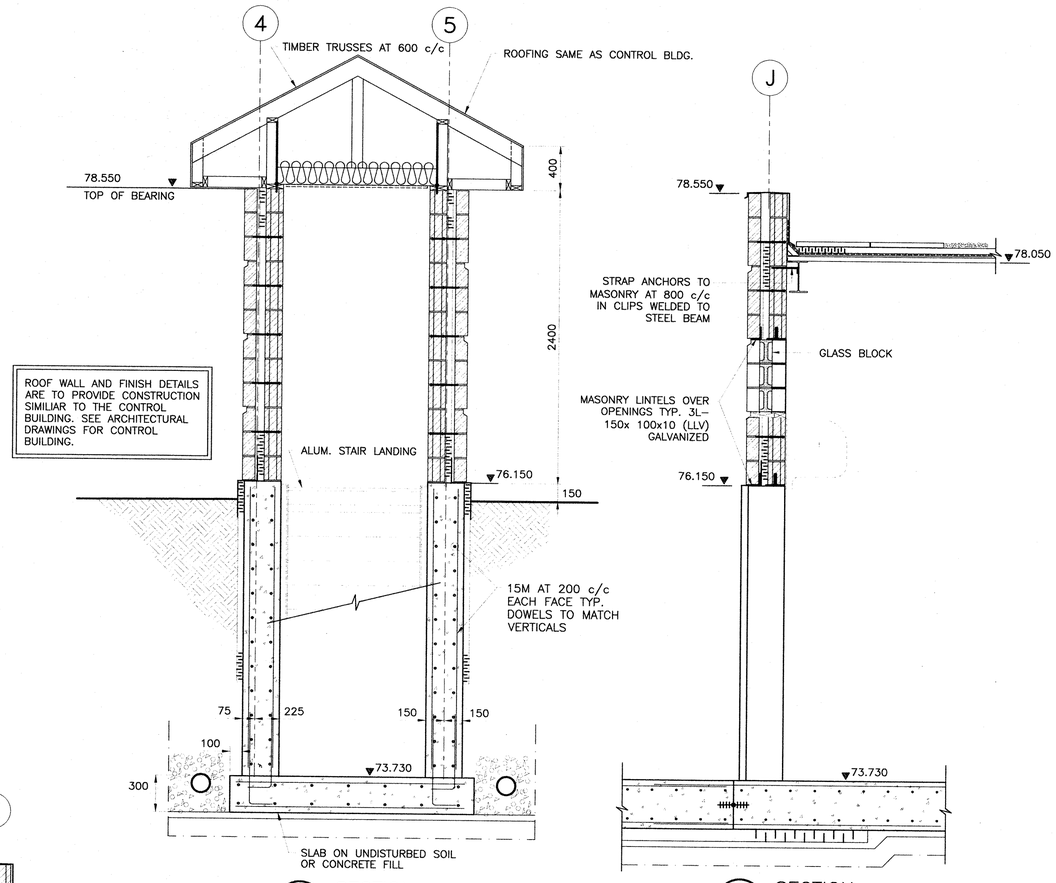

A/11 SECTION 1:25

B/11 SECTION 1:25

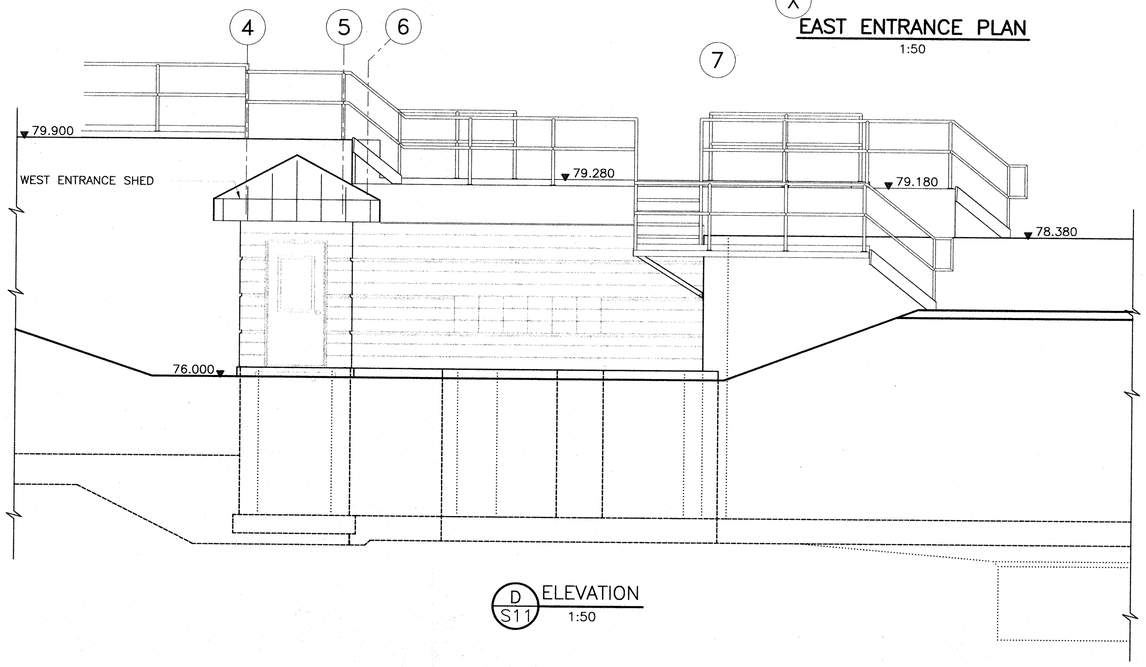

D/S11 ELEVATION 1:50

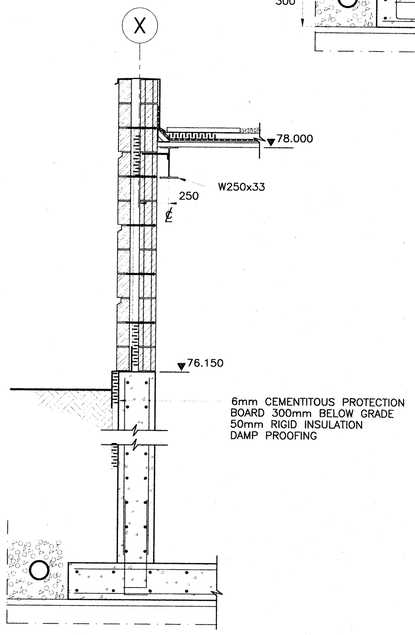

C/11 SECTION 1:25

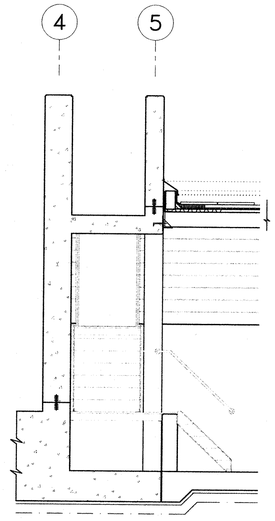

F/11 SECTION 1:50

No.	Date	Revision
4	MARCH/98	AS BUILT
3	OCT/95	ISSUED FOR TENDER
2	SEPT. 15/95	ISSUED FOR REVIEW
1	JAN. 16/95	ISSUED FOR M.O.E.E. APPROVAL

McNEELY ENGINEERING CONSULTANTS LTD.

Owner: **TOWNSHIP OF OSNABRUCK**

Project: **INGLESIDE SEWAGE TREATMENT PLANT**
O.C.W.A. SEWAGE WORKS PROJECT No. 40-0797

Title: **ALUM BUILDING**
PLANS and SECTIONS

Design	S.D.M.	Scale	AS SHOWN	Proj. No.	M2544-4	Dwg No.
Drawn	HDB	Check	S.T.R.	Date	AUG 30/95	S12

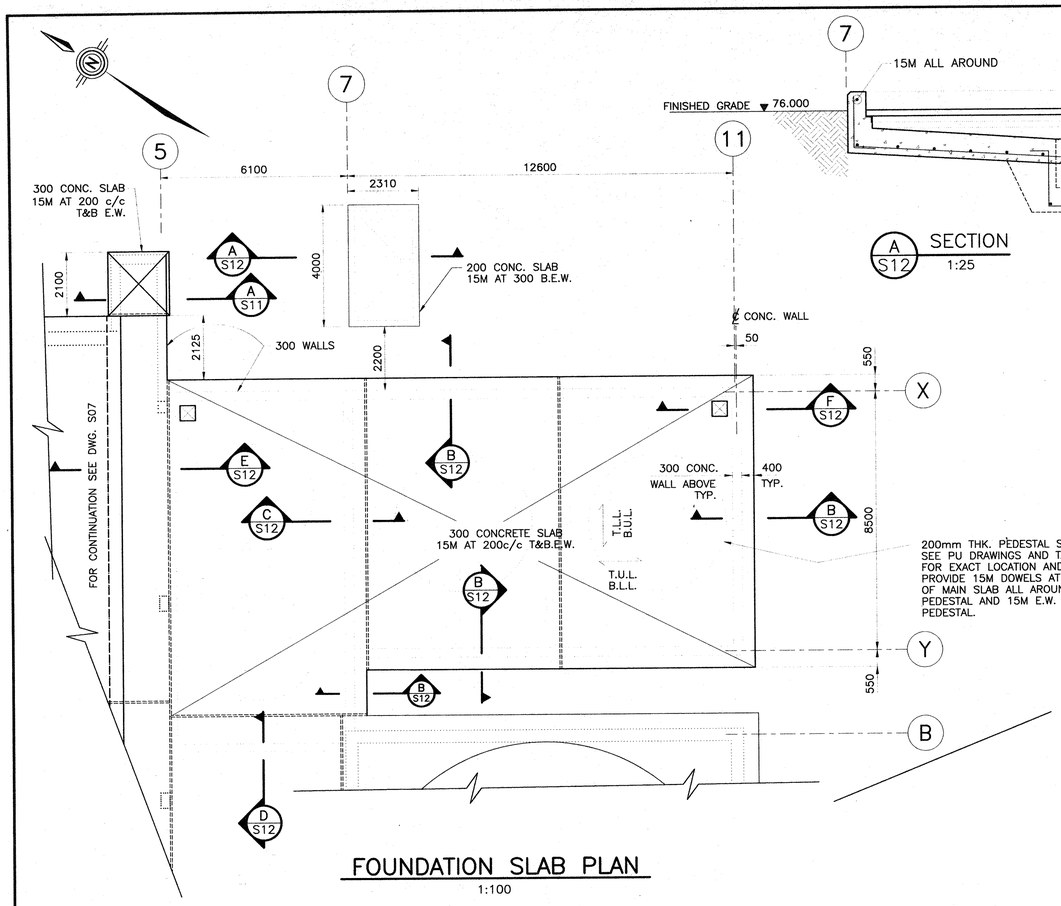

FOUNDATION SLAB PLAN
1:100

1. SEE GENERAL NOTES DWG. S01
2. TOP OF SLAB ELEVATION 73.730
3. CHEMICAL TANKS REQUIRE 200mm PEDESTAL SLAB SEE TANK SUPPLIER FOR REINFORCING AND, DETAILS

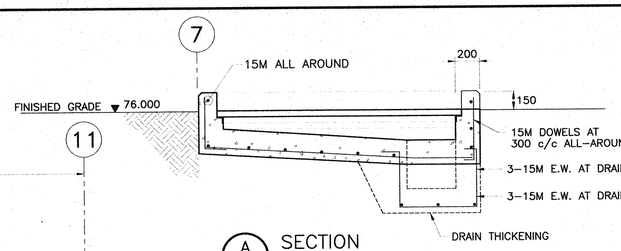

A S12 SECTION 1:25

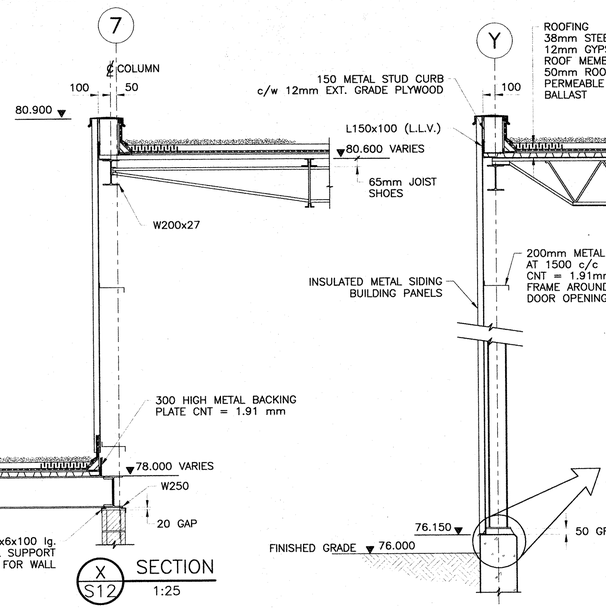

X S12 SECTION 1:25

Y S12 SECTION 1:25

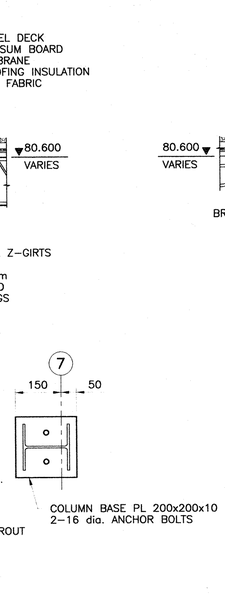

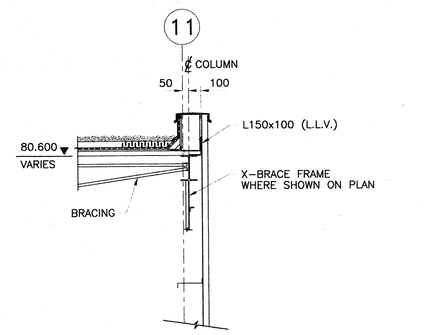

Z S12 SECTION 1:25

AS BUILT

NOTE: REVISED "AS-BUILT" DRAWING. THIS DRAWING HAS BEEN REVISED TO INCORPORATE CHANGES AS INDICATED IN THE CONTRACTOR'S MARKED UP DRAWINGS. CHANGES DONE BY OWNER/OCWA WITHOUT THE CONSULTANT'S INVOLVEMENT ARE NOT INCLUDED ON THE DRAWINGS. CONTRACTOR'S DRAWINGS ARE NOT VERIFIED ON SITE BY ENGINEER. THE ENGINEER DOES NOT TAKE RESPONSIBILITY FOR INFORMATION ON THIS DRAWING THAT IS IN CONFLICT WITH THE EXISTING CONDITION DUE TO INACCURATE OR MISSING INFORMATION ON SOURCE DOCUMENTS PROVIDED.

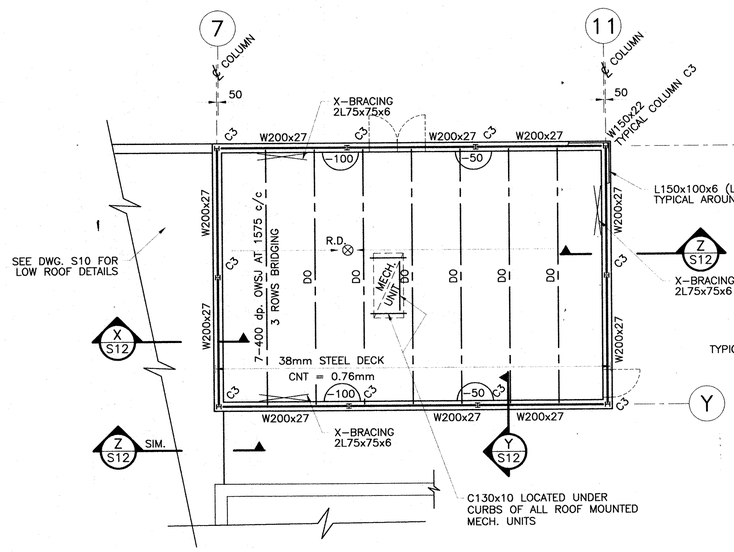

ALUM ROOF FRAMING PLAN
1:100

1. UNDERSIDE OF STEEL DECK HIGH POINT DATUM ELEV. 80.600 SLOPE ROOF 100mm TO DRAIN MARKED THUS (-50)
2. LIVE LOAD IS 2.0 kPa
3. SUPERIMPOSED ROOFING DEAD LOAD IS 1.0 kPa
4. DESIGN STEEL JOISTS FOR CONCENTRATED LOAD APPLIED BY MECHANICAL UNIT.

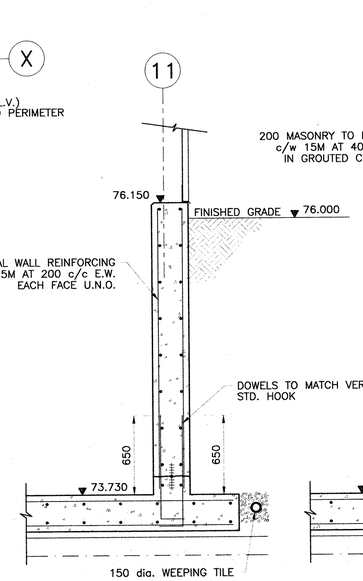

B S12 SECTION 1:25

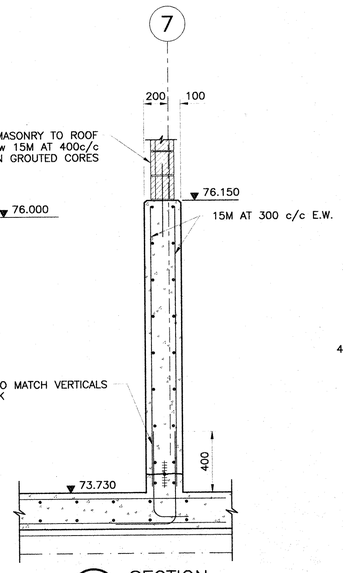

C S12 SECTION 1:25

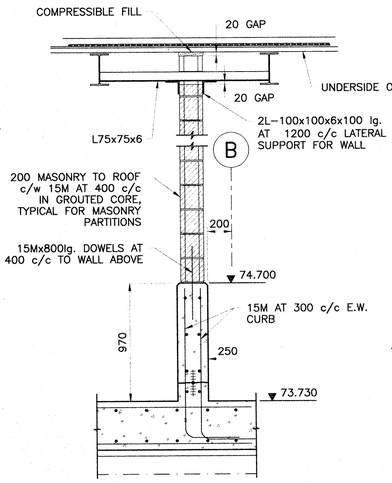

D S12 SECTION 1:25

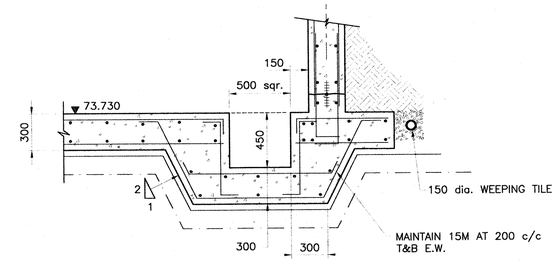

F S12 SECTION 1:25

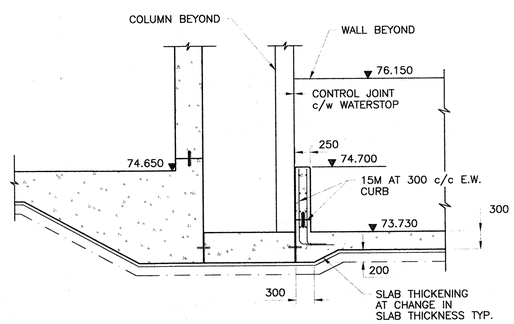

E S12 SECTION 1:50

AS BUILT

NOTE: REVISED "AS-BUILT" DRAWING. THIS DRAWING HAS BEEN REVISED TO INCORPORATE CHANGES AS INDICATED IN THE CONTRACTOR'S MARKED UP DRAWINGS. CHANGES DONE BY OWNER/OCWA WITHOUT THE CONSULTANT'S INVOLVEMENT ARE NOT INCLUDED ON THE DRAWINGS. CONTRACTOR'S DRAWINGS ARE NOT VERIFIED ON SITE BY ENGINEER. THE ENGINEER DOES NOT TAKE RESPONSIBILITY FOR INFORMATION ON THIS DRAWING THAT IS IN CONFLICT WITH THE EXISTING CONDITION DUE TO INACCURATE OR MISSING INFORMATION ON SOURCE DOCUMENTS PROVIDED.

No.	Date	Revision
4	MARCH/98	AS BUILT
3	OCT/95	ISSUED FOR TENDER
2	SEPT. 15/95	ISSUED FOR REVIEW
1	JAN. 16/95	ISSUED FOR M.O.E.E. APPROVAL

McNEELY ENGINEERING CONSULTANTS LTD.

Owner: TOWNSHIP OF OSNABRUCK

Project: INGLESIDE SEWAGE TREATMENT PLANT
O.C.W.A. SEWAGE WORKS PROJECT No. 40-0797

Title: PARSHALL FLUME
PLANS, SECTIONS, and DETAILS

Design	F.J.P.	Scale	1:50	Proj. No.	M2544-4	Dwg No.
Drawn		Check	S.T.R.	Date	AUG 30/95	S13

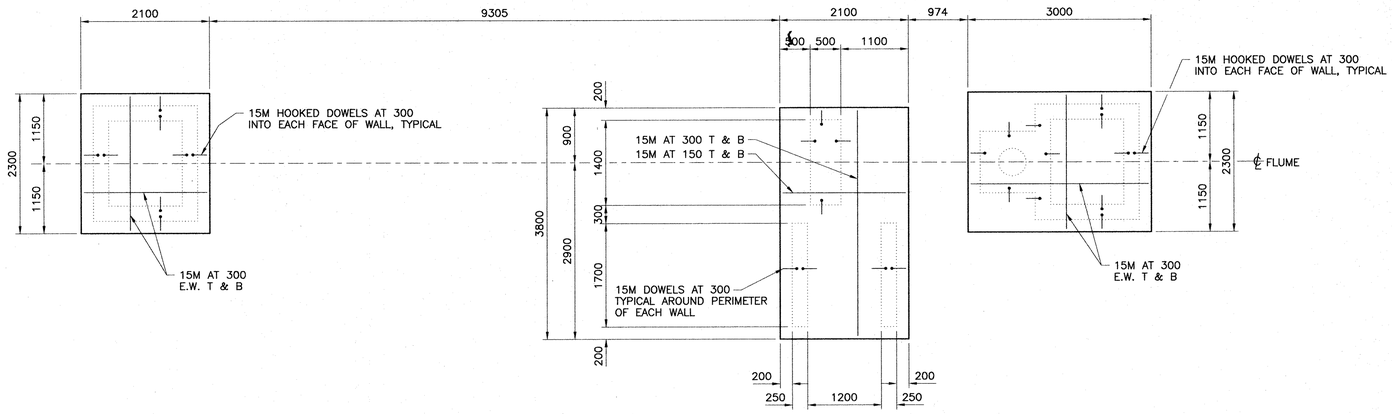

FOOTING PLAN
1:50

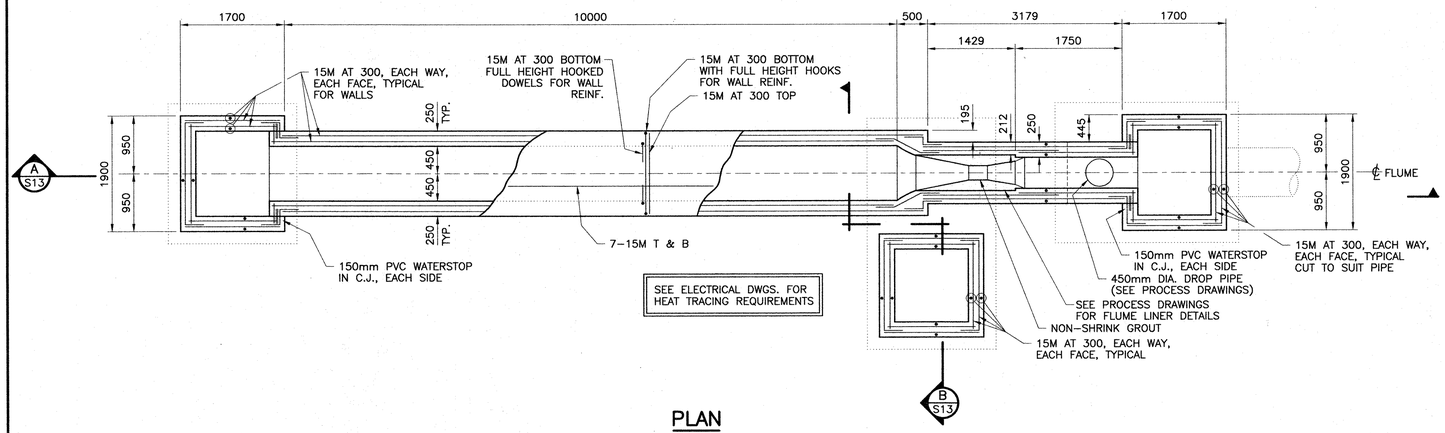

PLAN
1:50

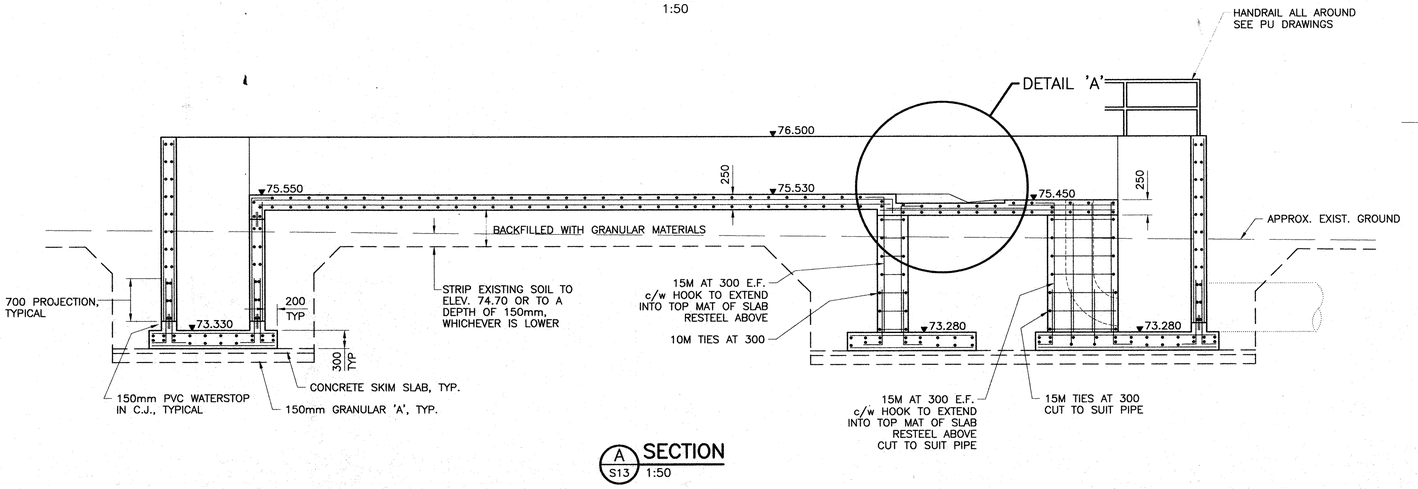

A S13 SECTION
1:50

NOTES:

- REFER TO GENERAL NOTES ON DRAWING S01.
- CONCRETE STRENGTH FOR FOOTINGS TO BE 25 MPa. ALL OTHER CONCRETE TO BE 30 MPa AT 28 DAYS.
- SEE PU DRAWINGS FOR HANDRAILS, LADDERS, GRATINGS, ETC.
- SEE PU DRAWINGS FOR PIPING.

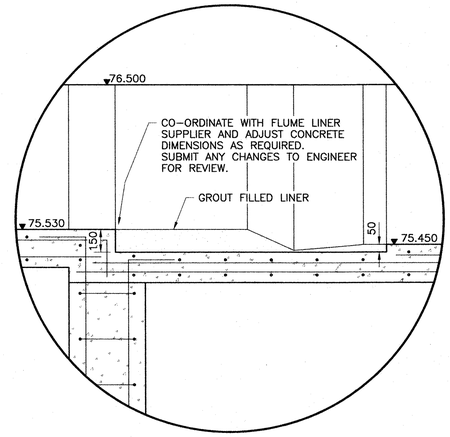

A S13 DETAIL
1:20

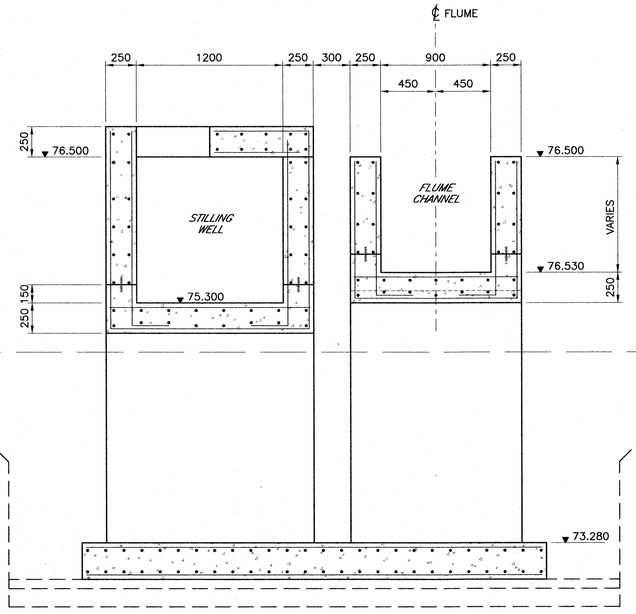

B S13 SECTION
1:25

AS BUILT

NOTE: REVISED "AS-BUILT" DRAWING. THIS DRAWING HAS BEEN REVISED TO INCORPORATE CHANGES AS INDICATED IN THE CONTRACTOR'S MARKED UP DRAWINGS. CHANGES DONE BY OWNER/OCWA WITHOUT THE CONSULTANT'S INVOLVEMENT ARE NOT INCLUDED ON THE DRAWINGS. CONTRACTOR'S DRAWINGS ARE NOT VERIFIED ON SITE BY ENGINEER. THE ENGINEER DOES NOT TAKE RESPONSIBILITY FOR INFORMATION ON THIS DRAWING THAT IS IN CONFLICT WITH THE EXISTING CONDITION DUE TO INACCURATE OR MISSING INFORMATION ON SOURCE DOCUMENTS PROVIDED.

NOTE:

IN ACCORDANCE WITH THE TENDER DOCUMENTS, CONTRACTORS MAY ELECT TO SUBMIT AN ALTERNATE SCHEME FOR THIS STRUCTURE IN THE FORM OF A GLASS LINED STEEL TANK. ANY PROPOSED ALTERNATE SCHEME SHALL CONFORM TO THE GEOMETRIC AND LOADING CONDITIONS SHOWN ON THE DRAWINGS AND IN THE SPECIFICATION.

NOTES:

- REFER TO GENERAL NOTES ON DRAWING S01.
- MAXIMUM GROUND WATER ELEVATION ASSUMED TO BE 75.00
- WALLS AND BASE SLAB HAVE BEEN DESIGNED FOR HYDROSTATIC PRESSURE CAUSED BY LIQUID OF SPECIFIC GRAVITY 1.05.
- CONCRETE STRENGTH TO BE 30 MPa.
- USE CLASS 'C' TENSION LAP FOR ALL LAP SPLICES. FOR CIRCUMFERENTIAL STEEL IN SLAB AND HORIZONTAL HOOP STEEL IN WALL, DO NOT SPLICE MORE THAN 1/3 OF BARS IN EACH FACE AT ANY GIVEN LOCATION. STAGGER SPLICES A MINIMUM OF 1.5m FROM ONE ROW TO THE NEXT AND ACROSS THE THICKNESS OF THE WALL OR SLAB.
- RECOMMENDED SEQUENCE OF BASE SEGMENT PLACING IS AS FOLLOWS:

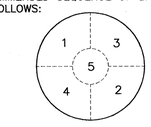

- WALL IS TO BE CAST WITHOUT VERTICAL OR HORIZONTAL JOINTS.

No.	Date	Revision
4	MARCH/98	AS BUILT
3	OCT/95	ISSUED FOR TENDER
2	SEPT. 15/95	ISSUED FOR REVIEW
1	JAN. 16/95	ISSUED FOR M.O.E.E. APPROVAL

McNEELY ENGINEERING CONSULTANTS LTD.

Owner: TOWNSHIP OF OSNABRUCK

Project: INGLESIDE SEWAGE TREATMENT PLANT
O.C.W.A. SEWAGE WORKS PROJECT No. 40-0797

Title: SLUDGE STORAGE TANK
PLAN, SECTIONS, and DETAILS

Design	F.J.P.	Scale	AS SHOWN	Proj. No.	M2544-4	Dwg No.
Drawn	Pen	Check	S.T.R.	Date	AUG 30/95	S14

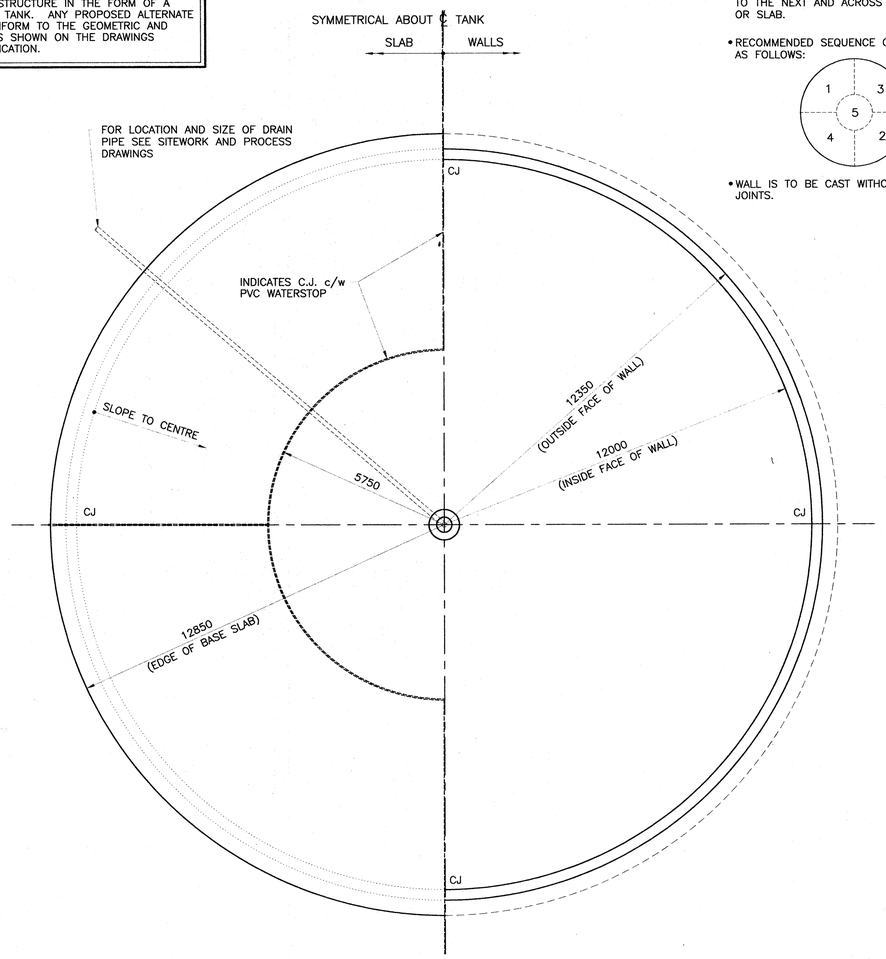

PLAN
1:100

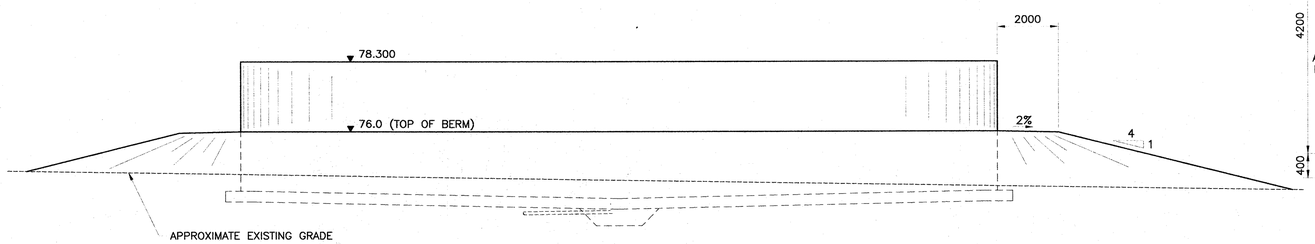

ELEVATION
1:100

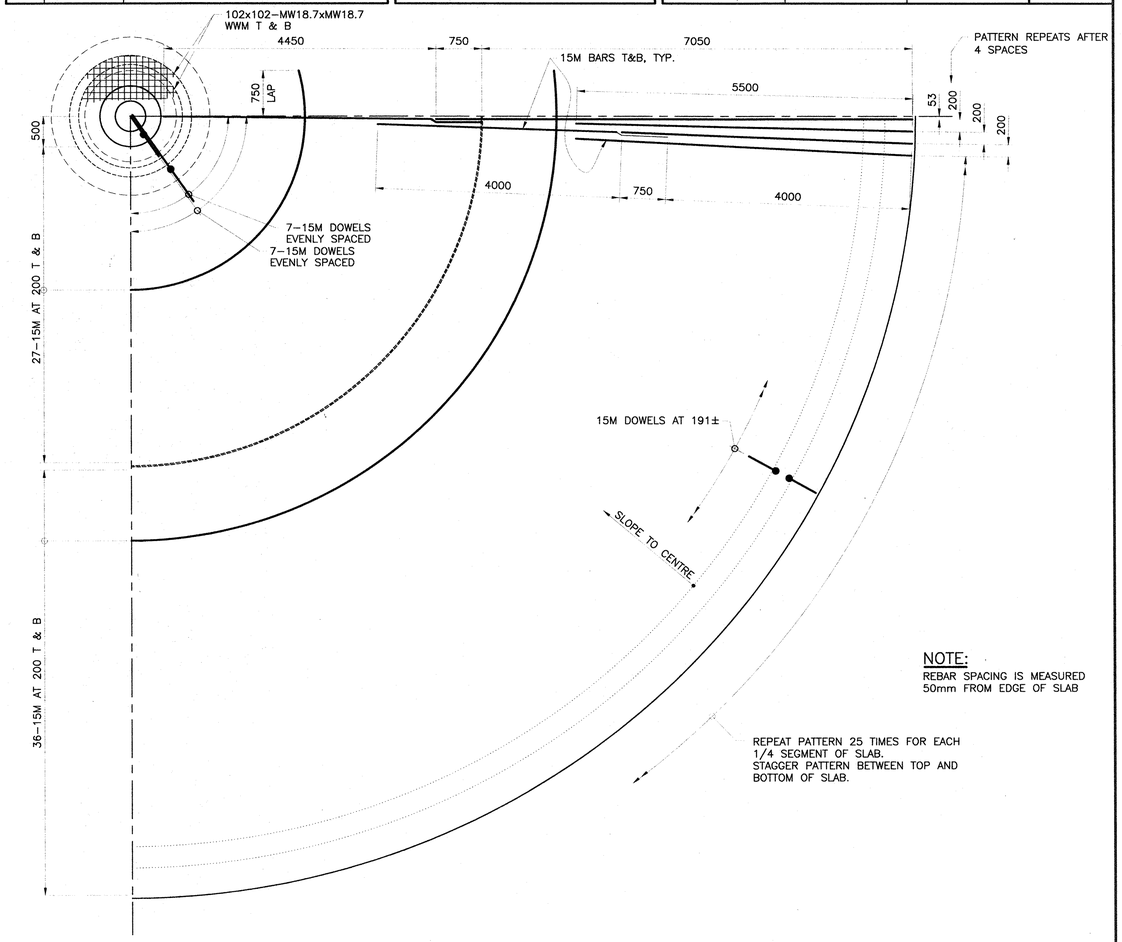

PART PLAN
1:50

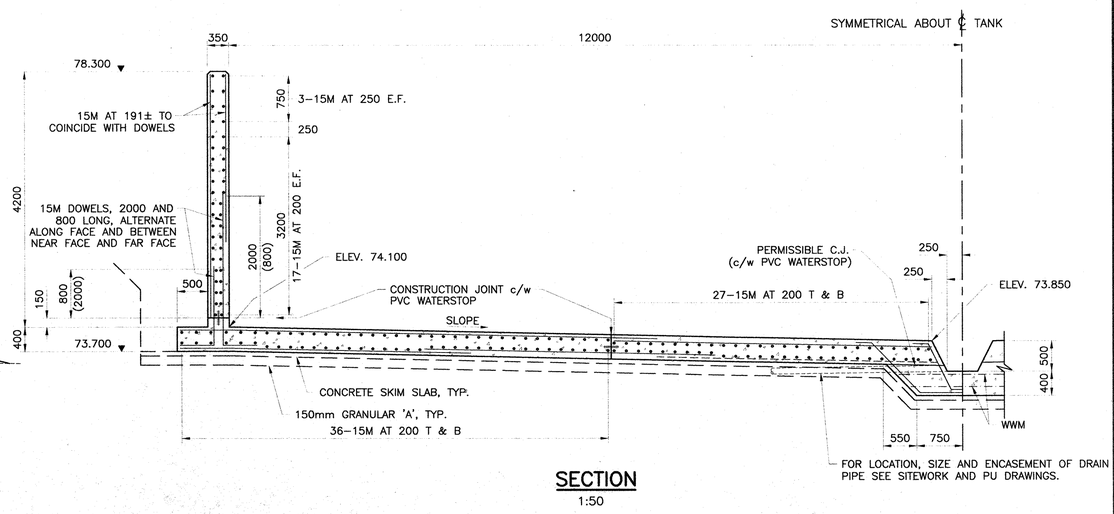

SECTION
1:50

AS BUILT

NOTE: REVISED "AS-BUILT" DRAWING. THIS DRAWING HAS BEEN REVISED TO INCORPORATE CHANGES AS INDICATED IN THE CONTRACTOR'S MARKED UP DRAWINGS. CHANGES DONE BY OWNER/OCWA WITHOUT THE CONSULTANT'S INVOLVEMENT ARE NOT INCLUDED ON THE DRAWINGS. CONTRACTOR'S DRAWINGS ARE NOT VERIFIED ON SITE BY ENGINEER. THE ENGINEER DOES NOT TAKE RESPONSIBILITY FOR INFORMATION ON THIS DRAWING THAT IS IN CONFLICT WITH THE EXISTING CONDITION DUE TO INACCURATE OR MISSING INFORMATION ON SOURCE DOCUMENTS PROVIDED.

NOTES:

- REFER TO GENERAL NOTES, DRAWING S01 AND TO TYPICAL ALUMINUM DETAILS, DRAWING S21.
- CONCRETE STRENGTH BELOW GRADE TO BE 25 MPa.
- CONCRETE STRENGTH ABOVE GRADE, INCLUDING SLAB-ON-GRADE, TO BE 30 MPa.
- ALL METAL FRAMING AND DECKING TO BE ALUMINUM.
- SECOND FLOOR SLAB DESIGN L.L. IS 3.6 kN/m² OVER OPEN FLOOR AREA AND 25 kN FOR CENTRIFUGES.

No.	Date	Revision
4	MARCH/98	AS BUILT
3	OCT/95	ISSUED FOR TENDER
2	SEPT. 15/95	ISSUED FOR REVIEW
1	JAN. 16/95	ISSUED FOR M.O.E.E. APPROVAL

McNEELY ENGINEERING CONSULTANTS LTD.

Owner: TOWNSHIP OF OSNABRUCK

Project: INGLESIDE SEWAGE TREATMENT PLANT
O.C.W.A. SEWAGE WORKS PROJECT No. 40-0797

Title: CENTRIFUGE BUILDING
PLANS, SECTIONS and DETAILS

Design	F.J.P.	Scale	1:50	Proj. No.	M2544-4	Dwg No.
Drawn	[illegible]	Check	S.T.R.	Date	AUG 30/95	S15

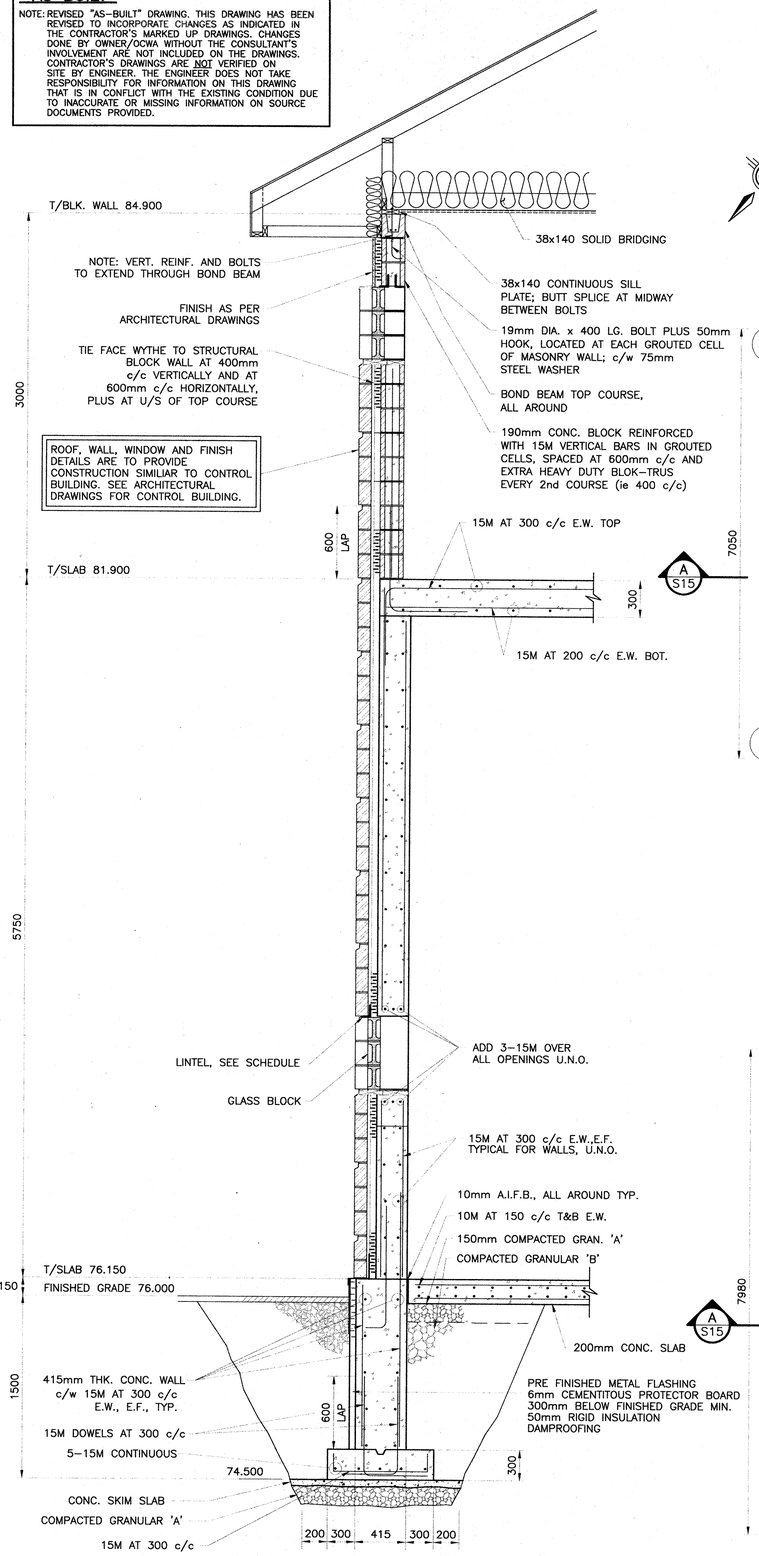

A S15 SECTION — TYPICAL WALL
1:25

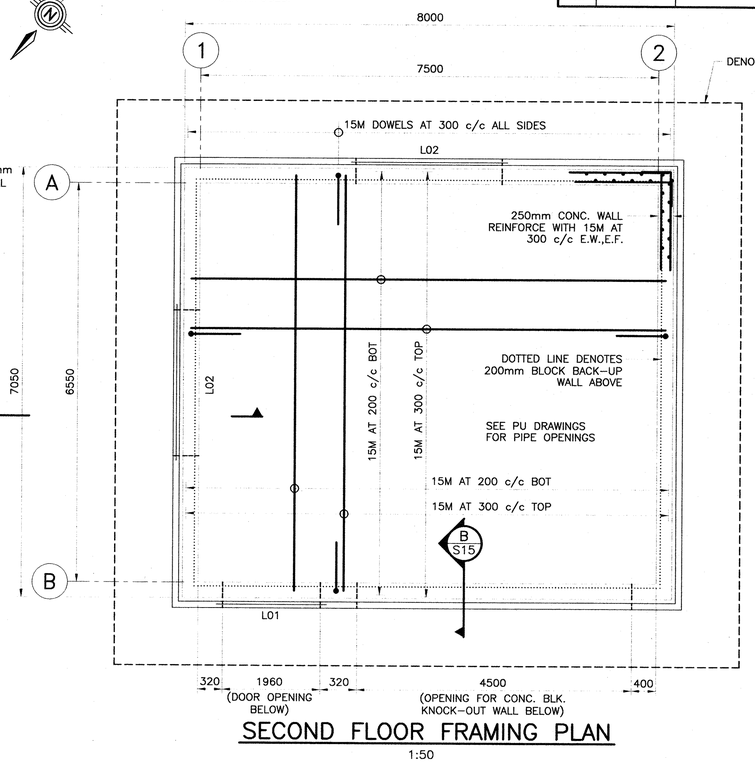

SECOND FLOOR FRAMING PLAN
1:50

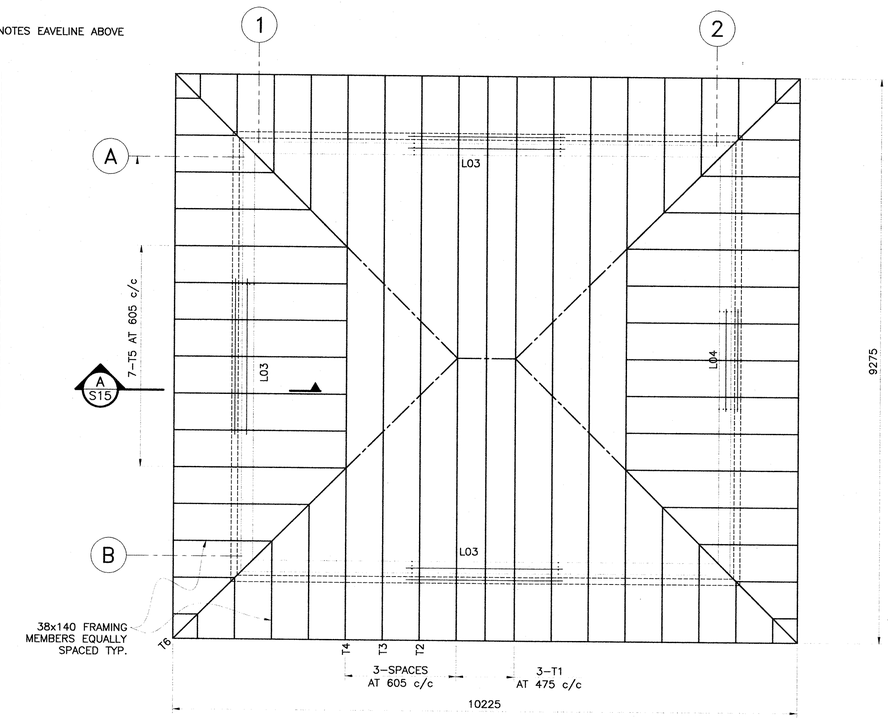

ROOF FRAMING PLAN
1:50

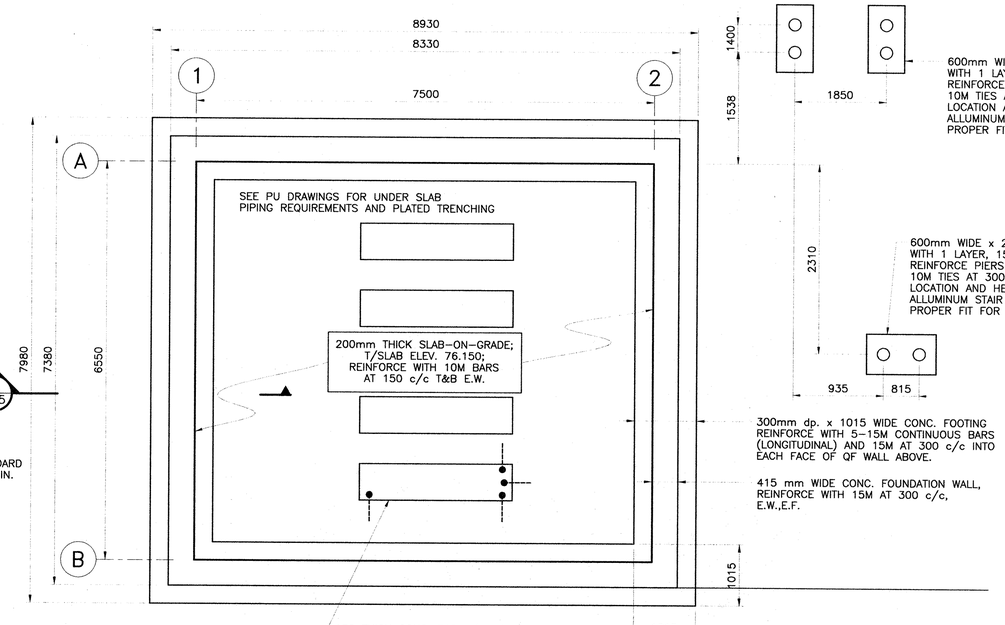

FOUNDATION SLAB PLAN
1:50

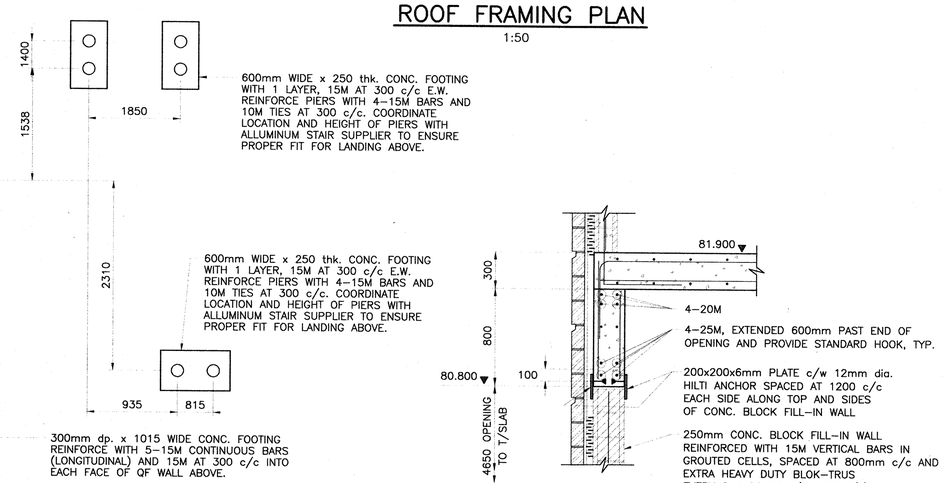

B S15 SECTION
1:25

AS BUILT

NOTE: REVISED "AS-BUILT" DRAWING. THIS DRAWING HAS BEEN REVISED TO INCORPORATE CHANGES AS INDICATED IN THE CONTRACTOR'S MARKED UP DRAWINGS. CHANGES DONE BY OWNER/OCWA WITHOUT THE CONSULTANT'S INVOLVEMENT ARE NOT INCLUDED ON THE DRAWINGS. CONTRACTOR'S DRAWINGS ARE NOT VERIFIED ON SITE BY ENGINEER. THE ENGINEER DOES NOT TAKE RESPONSIBILITY FOR INFORMATION ON THIS DRAWING THAT IS IN CONFLICT WITH THE EXISTING CONDITION DUE TO INACCURATE OR MISSING INFORMATION ON SOURCE DOCUMENTS PROVIDED.

No.	Date	Revision
4	MARCH/98	AS BUILT
3	OCT/95	ISSUED FOR TENDER
2	SEPT. 15/95	ISSUED FOR REVIEW
1	JAN. 16/95	ISSUED FOR M.O.E.E. APPROVAL

McNEELY ENGINEERING CONSULTANTS LTD.

Owner: TOWNSHIP OF OSNABRUCK

Project: INGLESIDE SEWAGE TREATMENT PLANT
O.C.W.A. SEWAGE WORKS PROJECT No. 40-0797

Title: CENTRIFUGE BUILDING
ELEVATIONS

Design	F.J.P.	Scale	1:50	Proj. No.	M2544-4
Drawn	[illegible]	Check	S.T.R.	Date	AUG 30/95

Dwg No. S16

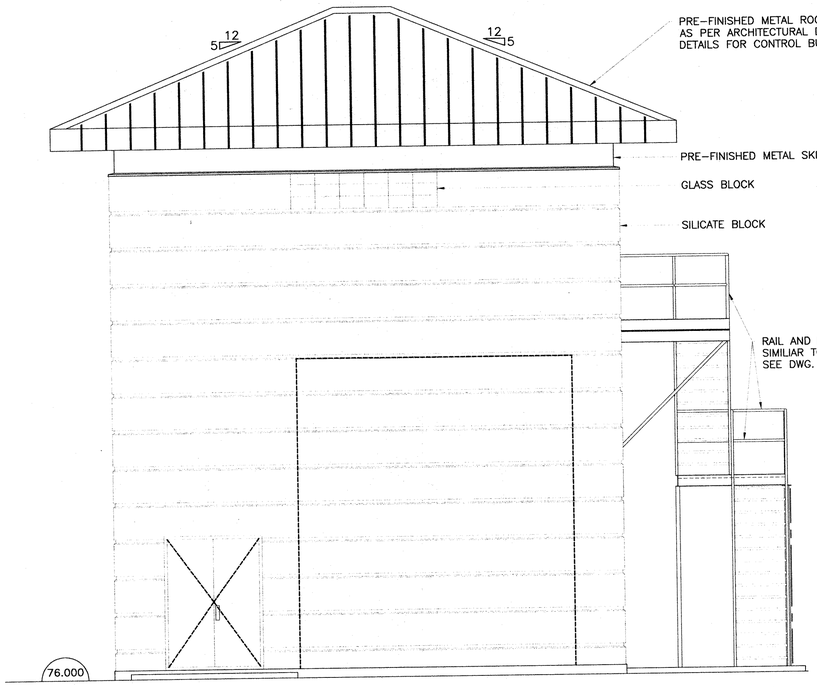

NORTH ELEVATION
1:50

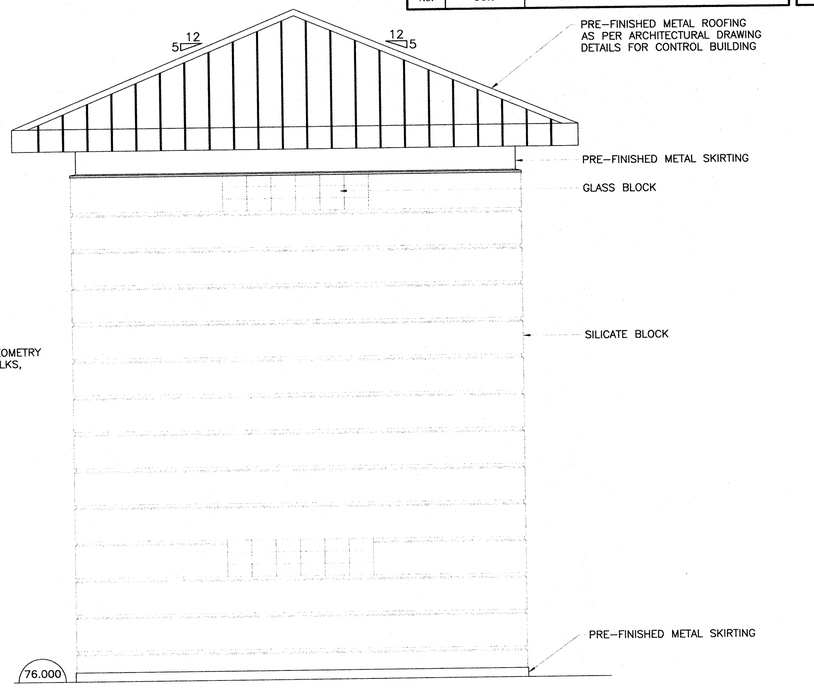

EAST ELEVATION
1:50

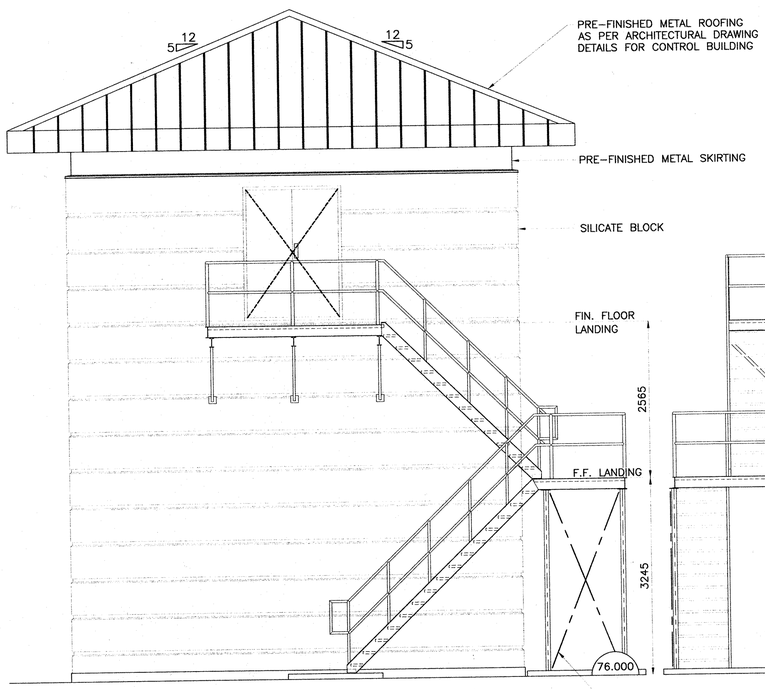

WEST ELEVATION
1:50

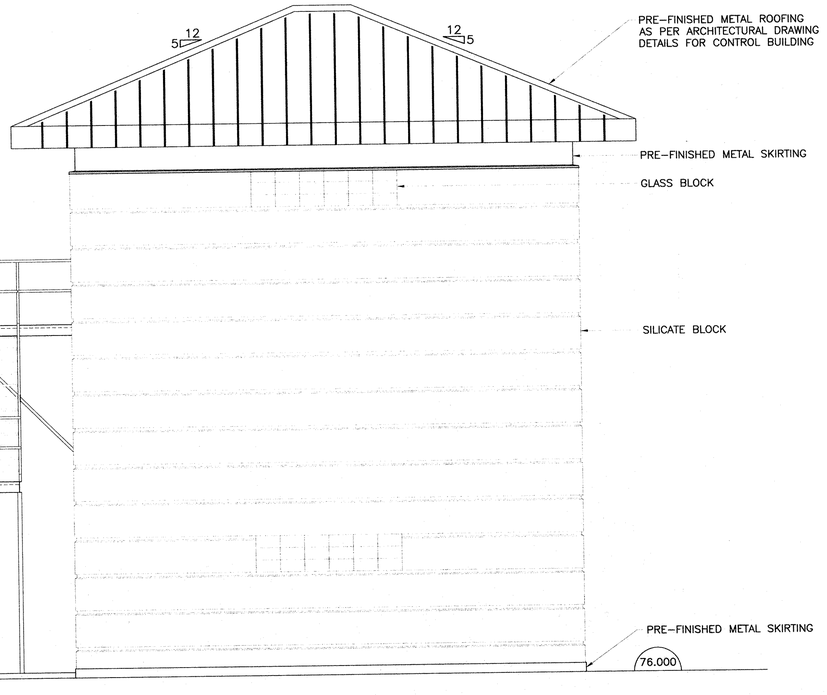

SOUTH ELEVATION
1:50

TRUSS SUMMARY

TRUSS MARK	TYPE	NOMINAL SPAN (mm)*	NUMBER REQUIRED	SHAPE
T1	TRIANGULAR	6860	3	5 12
T2–T4	HIP	6860	6	5 12
T5	MONO	1525	14	12 5
T6	MONO	2155	4	12 3.54

* THIS IS AN APPROXIMATE DIMENSION, INTENDED FOR ESTIMATING PURPOSES ONLY. SEE ARCHITECTURAL DRAWINGS FOR DETAILING AND FABRICATION DIMENSIONS.

NOTES:

- REFER TO GENERAL NOTES, DRAWING S01.
- IN ADDITION TO TRUSS SELF WEIGHT, TRUSS DEAD LOADS SHALL BE AS FOLLOWS:
  - TOP CHORD
    - METAL ROOFING : 0.10 kN/m²
    - PLYWOOD SHEATHING : 0.10 kN/m²
    - 0.20 kN/m²
  - BOTTOM CHORD
    - BATT INSULATION : 0.15 kN/m²
    - STRAPPING : 0.05 kN/m²
    - DRYWALL CEILING : 0.13 kN/m²
    - SUSPENDED CEILING : 0.17 kN/m²
    - MECH. & ELEC. ALLOWANCE : 0.15 kN/m²
    - 0.65 kN/m²
- TRUSS LIVE LOADS, APPLIED TO THE TOP CHORD, SHALL BE AS FOLLOWS:
  - UNIFORM SNOW & RAIN: S = 2.0 kN/m²
  - VALLEY SNOW & RAIN: S = 2.4 kN/m² OR S = 3.0 kN/m² (APPLIED IN ACCORDANCE WITH O.B.C.)
  - NET WIND UPLIFT: U_{NET} = 0.25 kN/m²
- TRUSS BEARINGS SHALL BE FASTENED TO SILL PLATES OR TO BLOCK MASONRY TO RESIST AN UNFACTORED UPLIFT OF 1.4 kN AT EACH END AND TO RESIST HORIZONTAL FORCE OF 3.0 kN.

LINTEL SCHEDULE

LINTEL MARK	CLEAR OPENING	LINTEL SHAPE AND SIZE
L01	1600	L125x90x10
L02	2400	L125x90x10
L03	2400	2L125x90x10
L04	1600	2L125x90x10 +L125x90x10

AS BUILT

NOTE: REVISED "AS-BUILT" DRAWING. THIS DRAWING HAS BEEN REVISED TO INCORPORATE CHANGES AS INDICATED IN THE CONTRACTOR'S MARKED UP DRAWINGS. CHANGES DONE BY OWNER/OCWA WITHOUT THE CONSULTANT'S INVOLVEMENT ARE NOT INCLUDED ON THE DRAWINGS. CONTRACTOR'S DRAWINGS ARE NOT VERIFIED ON SITE BY ENGINEER. THE ENGINEER DOES NOT TAKE RESPONSIBILITY FOR INFORMATION ON THIS DRAWING THAT IS IN CONFLICT WITH THE EXISTING CONDITION DUE TO INACCURATE OR MISSING INFORMATION ON SOURCE DOCUMENTS PROVIDED.

NOTES:

- REFER TO GENERAL NOTES, DRAWING S01 AND TO TYPICAL ALUMINUM DETAILS, DRAWING S21.
- CONCRETE STRENGTH TO BE 30 MPa.
- ALL METAL FRAMING AND DECKING TO BE ALUMINUM.
- DESIGN OF ALUMINUM STRUCTURAL MEMBERS TO BE FOR 3.6 kPa. LIVE LOAD PLUS ANY OTHER APPLICABLE LOADING DUE TO SNOW, RAIN, WIND, EARTHQUAKE, etc. IN ACCORDANCE WITH THE ONTARIO BUILDING CODE.

No.	Date	Revision
4	MARCH/98	AS BUILT
3	OCT/95	ISSUED FOR TENDER
2	SEPT. 15/95	ISSUED FOR REVIEW
1	JAN. 16/95	ISSUED FOR M.O.E.E. APPROVAL

McNEELY ENGINEERING CONSULTANTS LTD.

Owner: TOWNSHIP OF OSNABRUCK

Project: INGLESIDE SEWAGE TREATMENT PLANT
O.C.W.A. SEWAGE WORKS PROJECT No. 40-0797

Title: SLUDGE LOADING PLATFORM
FLOOR PLAN and SECTION

Design	F.J.P.	Scale	AS SHOWN	Proj. No.	M2544-4	Dwg No.
Drawn	RKB	Check	S.T.R.	Date	AUG 30/95	S17

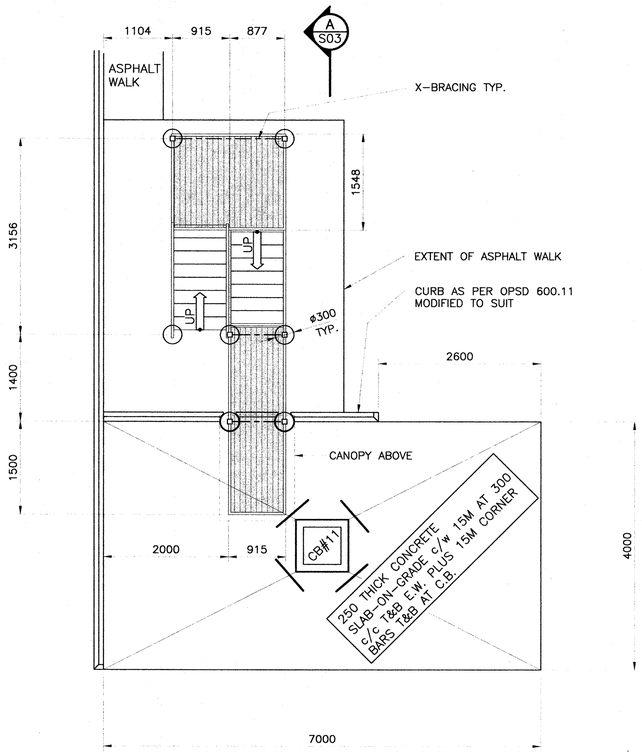

PLAN
1:50

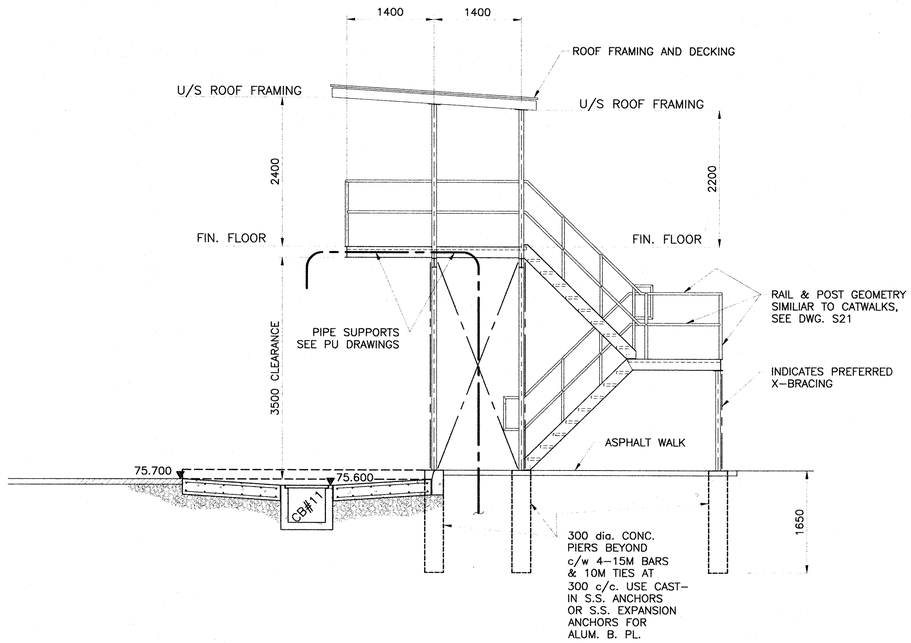

A S16 SECTION
1:50

NOTES:

- REFER TO GENERAL NOTES, DRAWING S01.
- CONCRETE STRENGTH TO BE 25 MPa.,

No.	Date	Revision
4	MARCH/98	AS BUILT
3	OCT/98	ISSUED FOR TENDER
2	SEPT. 15/95	ISSUED FOR REVIEW
1	JAN. 16/95	ISSUED FOR M.O.E.E. APPROVAL

McNEELY ENGINEERING CONSULTANTS LTD.

Owner: TOWNSHIP OF OSNABRUCK

Project: INGLESIDE SEWAGE TREATMENT PLANT
O.C.W.A. SEWAGE WORKS PROJECT No. 40-0797

Title: CONTROL BUILDING
FOOTING PLAN, SLAB-ON-GRADE PLAN, and ELEVATIONS

Design	F.J.P.	Scale	AS SHOWN	Proj. No.	M2544-4	Dwg No.
Drawn	[illegible]	Check	S.T.R.	Date	AUG 30/95	S18

AS BUILT

NOTE: REVISED "AS-BUILT" DRAWING. THIS DRAWING HAS BEEN REVISED TO INCORPORATE CHANGES AS INDICATED IN THE CONTRACTOR'S MARKED UP DRAWINGS. CHANGES DONE BY OWNER/OCWA WITHOUT THE CONSULTANT'S INVOLVEMENT ARE NOT INCLUDED ON THE DRAWINGS. CONTRACTOR'S DRAWINGS ARE NOT VERIFIED ON SITE BY ENGINEER. THE ENGINEER DOES NOT TAKE RESPONSIBILITY FOR INFORMATION ON THIS DRAWING THAT IS IN CONFLICT WITH THE EXISTING CONDITION DUE TO INACCURATE OR MISSING INFORMATION ON SOURCE DOCUMENTS PROVIDED.

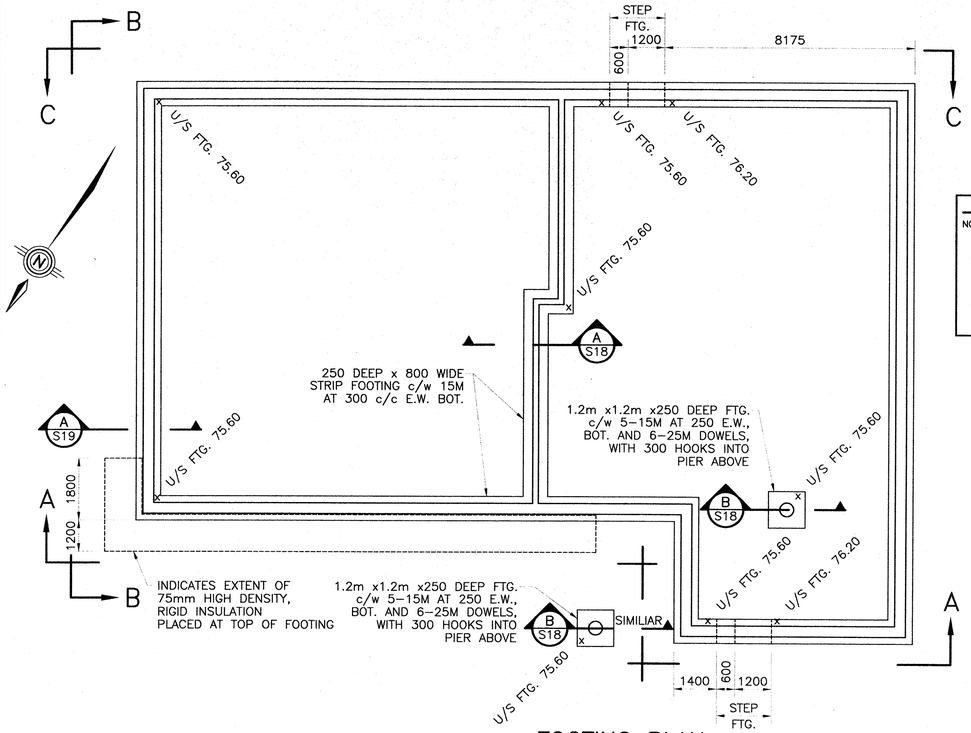

FOOTING PLAN
1:100

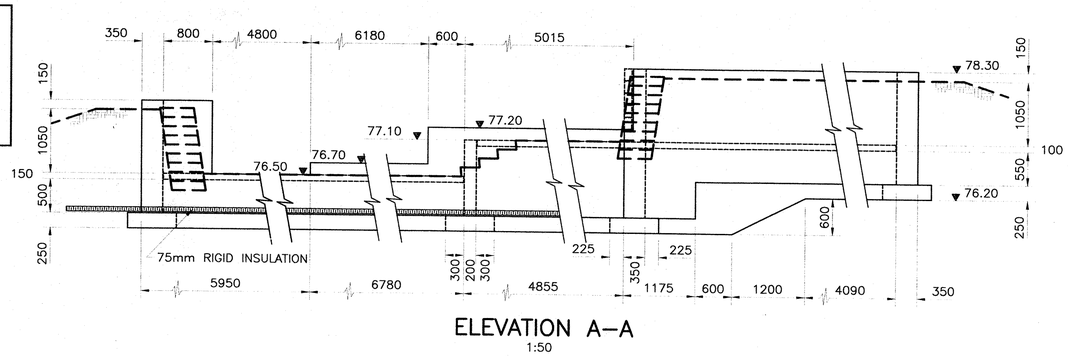

ELEVATION A-A
1:50

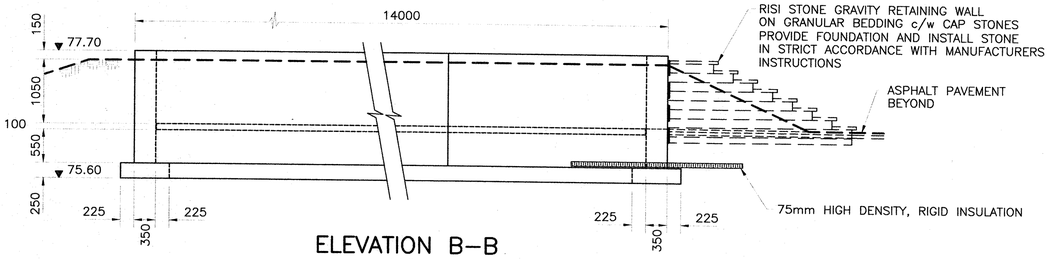

ELEVATION B-B
1:50

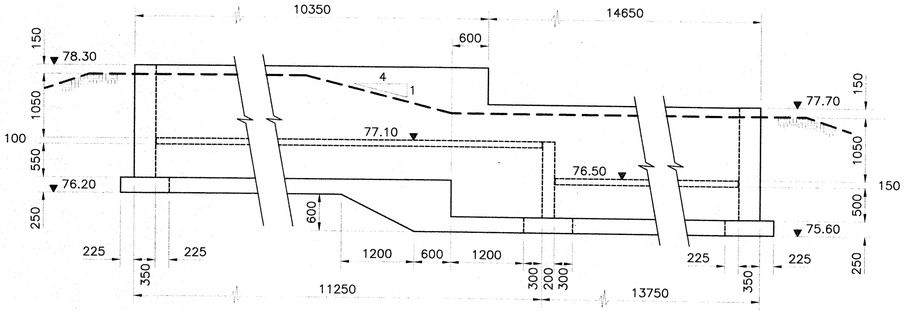

ELEVATION C-C
1:50

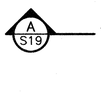

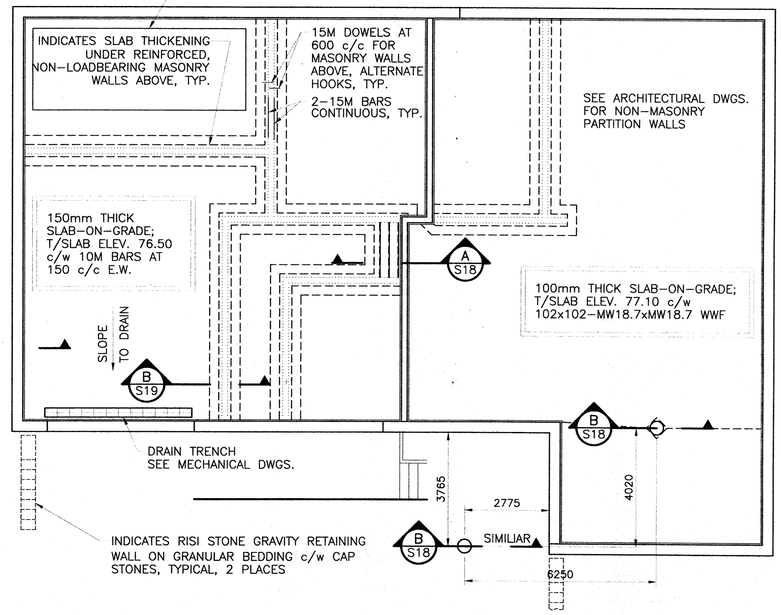

FOUNDATION WALL AND SLAB-ON-GRADE PLAN
1:100

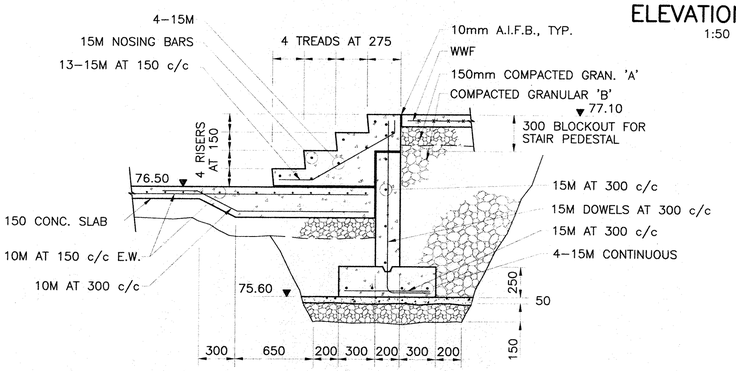

A S18 SECTION
1:25

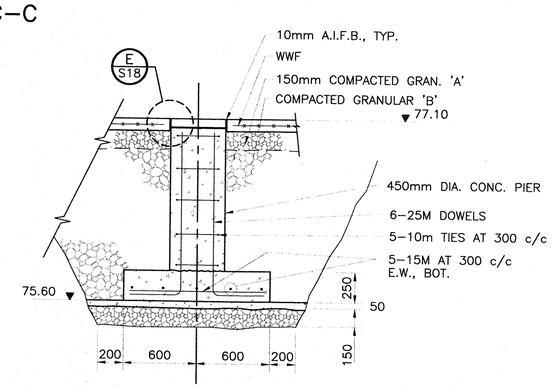

B S18 SECTION
1:25

No.	Date	Revision
4	MARCH/98	AS BUILT
3	SEPT. 28/95	ISSUED FOR TENDER
2	SEPT. 15/95	ISSUED FOR REVIEW
1	JAN. 16/95	ISSUED FOR M.O.E.E. APPROVAL

McNEELY ENGINEERING CONSULTANTS LTD.

Owner: TOWNSHIP OF OSNABRUCK

Project: INGLESIDE SEWAGE TREATMENT PLANT
O.C.W.A. SEWAGE WORKS PROJECT No. 40-0797

Title: CONTROL BUILDING
MASONRY WALL PLAN, SECTIONS, and DETAILS

Design	F.J.P.	Scale	AS SHOWN	Proj. No.	M2544-4	Dwg No.
Drawn	[illegible]	Check	S.T.R.	Date	AUG 30/95	S19

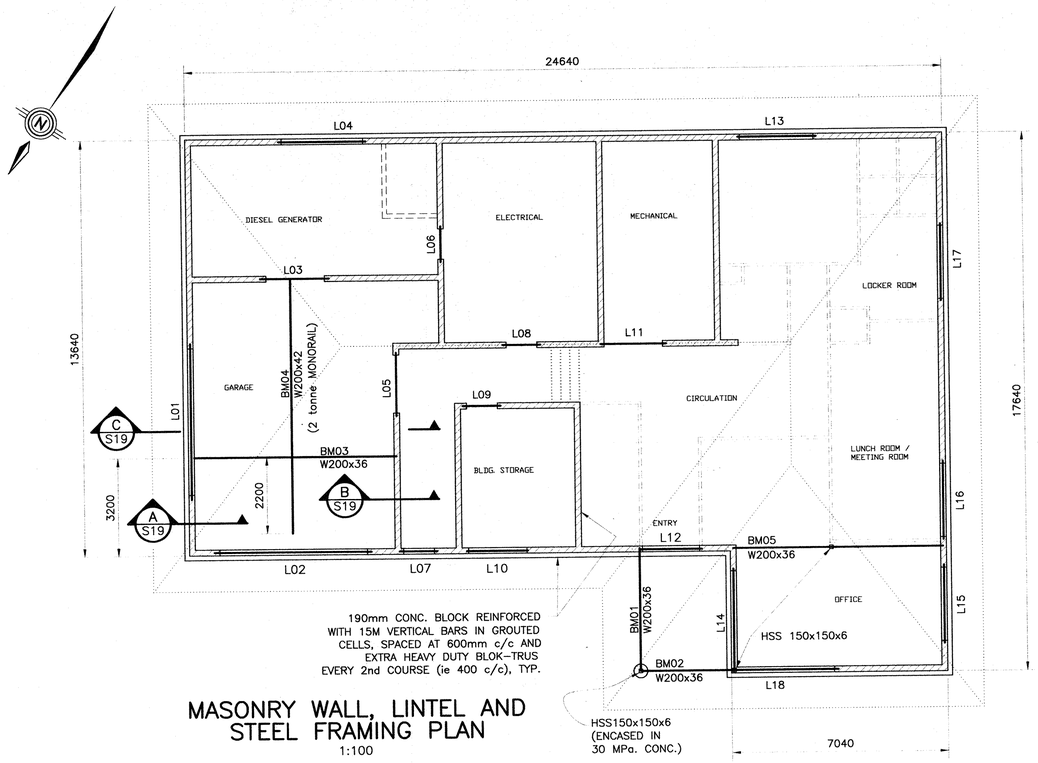

190mm CONC. BLOCK REINFORCED WITH 15M VERTICAL BARS IN GROUTED CELLS, SPACED AT 600mm c/c AND EXTRA HEAVY DUTY BLOK-TRUS EVERY 2nd COURSE (ie 400 c/c), TYP.

HSS150x150x6 (ENCASED IN 30 MPa. CONC.)

MASONRY WALL, LINTEL AND STEEL FRAMING PLAN
1:100

AS BUILT

NOTE: REVISED "AS-BUILT" DRAWING. THIS DRAWING HAS BEEN REVISED TO INCORPORATE CHANGES AS INDICATED IN THE CONTRACTOR'S MARKED UP DRAWINGS. CHANGES DONE BY OWNER/OCWA WITHOUT THE CONSULTANT'S INVOLVEMENT ARE NOT INCLUDED ON THE DRAWINGS. CONTRACTOR'S DRAWINGS ARE NOT VERIFIED ON SITE BY ENGINEER. THE ENGINEER DOES NOT TAKE RESPONSIBILITY FOR INFORMATION ON THIS DRAWING THAT IS IN CONFLICT WITH THE EXISTING CONDITION DUE TO INACCURATE OR MISSING INFORMATION ON SOURCE DOCUMENTS PROVIDED.

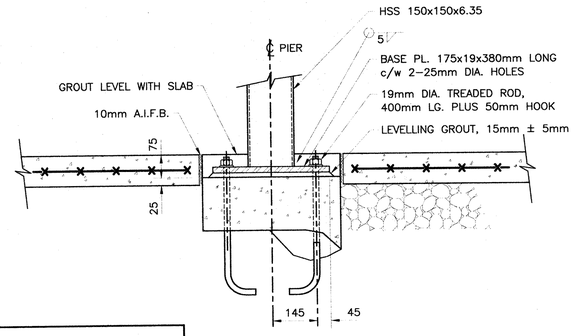

E S19 SECTION 1:10

BEAM SCHEDULE

BEAM MARK	NOMINAL SPAN (mm)*	BEAM SHAPE AND SIZE	FACTORED END SHEAR Vf (kN)
BM01	4000	W200x36	70
BM02	3030	W200x36	70
BM03	6690	W200x36	50 (SEE SECTION C)
BM04	5800 + 2200	W200x42	50 (SEE SECTION C)
BM05	3650 + 3240	W200x36	70

* THIS IS AN APPROXIMATE DIMENSION, INTENDED FOR ESTIMATING PURPOSES ONLY. SEE ARCHITECTURAL DRAWINGS FOR EXACT DIMENSIONS REQUIRED FOR DETAILING AND FABRICATION.

LINTEL SCHEDULE

LINTEL MARK	CLEAR OPNG. (mm)*	LINTEL SHAPE AND SIZE	CONFIGURATION
L01	4800	W200x36	
L02	4800	W200x42	
L03 L05 L11	1900	2L125x90x10 (L.L.V.)	
L04	1800	2L125x90x10 (L.L.V.)	
L06 L08 L09	1000	2L75x90x6 (L.L.H.)	
L07	1000	2L75x90x6 (L.L.H.)	
L10 L12	1900	2L125x90x10 (L.L.V.)	
L14	3200 ±	W200x36	
L13 L15 L16 L17	2400	W200x36	
L18	3370	W200x36	

* THIS IS AN APPROXIMATE DIMENSION, INTENDED FOR ESTIMATING PURPOSES ONLY. SEE ARCHITECTURAL DRAWINGS FOR EXACT DIMENSIONS REQUIRED FOR DETAILING AND FABRICATION.

NOTE:
- MINIMUM LINTEL BEARING LENGTH, 200mm.
- DOUBLE ANGLES TO BE BOLTED WITH M16 BOLTS AT 600 c/c OR EQUIVALENT STITCH WELD T & B.

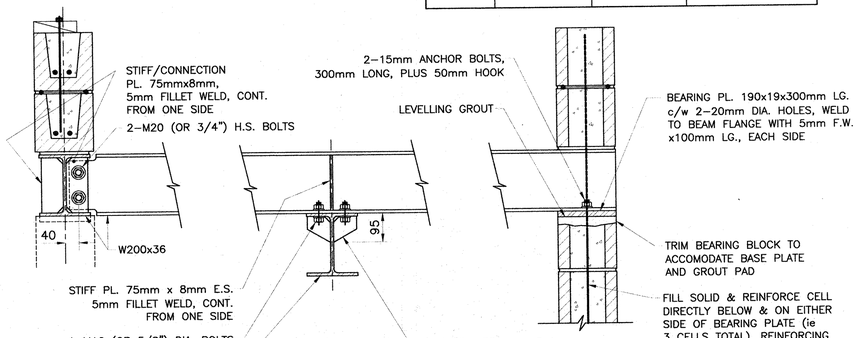

C S19 SECTION 1:10

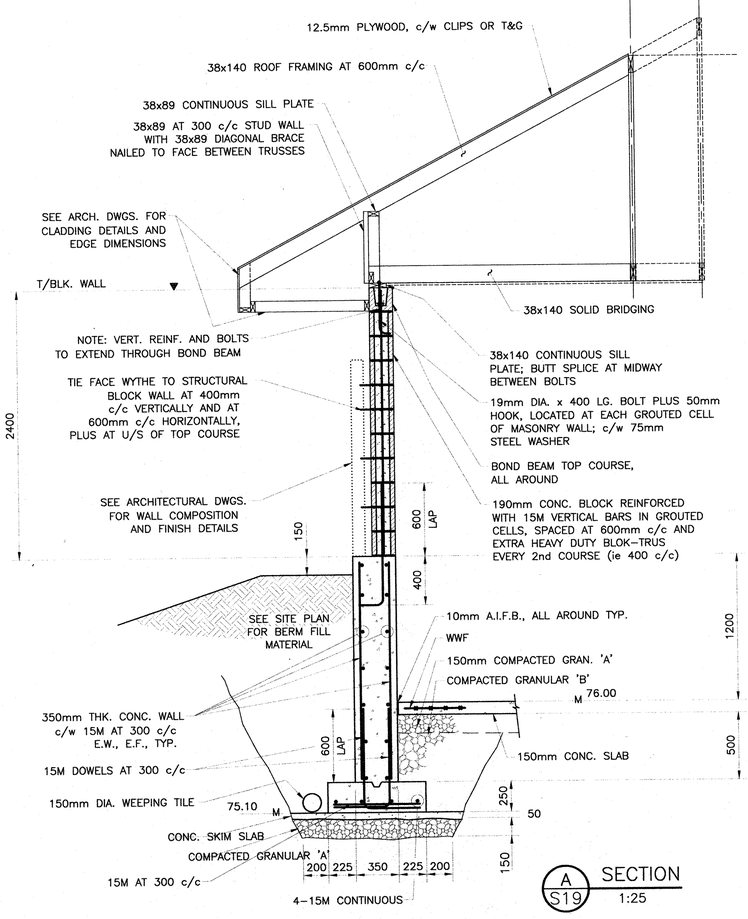

A S19 SECTION 1:25

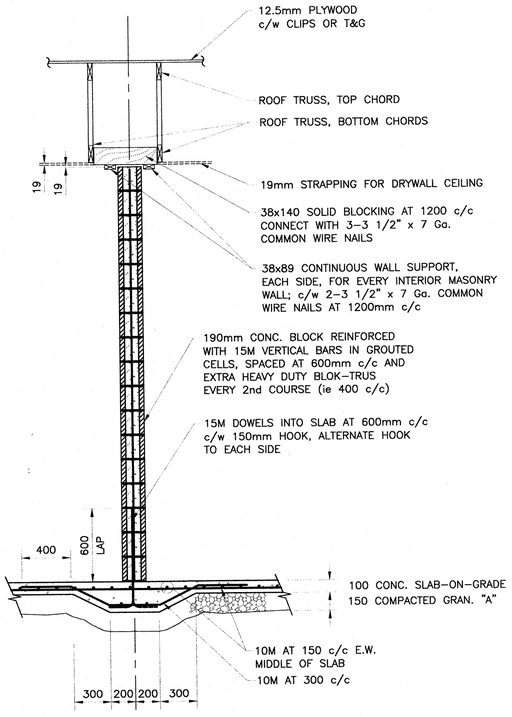

B S19 SECTION 1:25

AS BUILT

NOTE: REVISED "AS-BUILT" DRAWING. THIS DRAWING HAS BEEN REVISED TO INCORPORATE CHANGES AS INDICATED IN THE CONTRACTOR'S MARKED UP DRAWINGS. CHANGES DONE BY OWNER/OCWA WITHOUT THE CONSULTANT'S INVOLVEMENT ARE NOT INCLUDED ON THE DRAWINGS. CONTRACTOR'S DRAWINGS ARE NOT VERIFIED ON SITE BY ENGINEER. THE ENGINEER DOES NOT TAKE RESPONSIBILITY FOR INFORMATION ON THIS DRAWING THAT IS IN CONFLICT WITH THE EXISTING CONDITION DUE TO INACCURATE OR MISSING INFORMATION ON SOURCE DOCUMENTS PROVIDED.

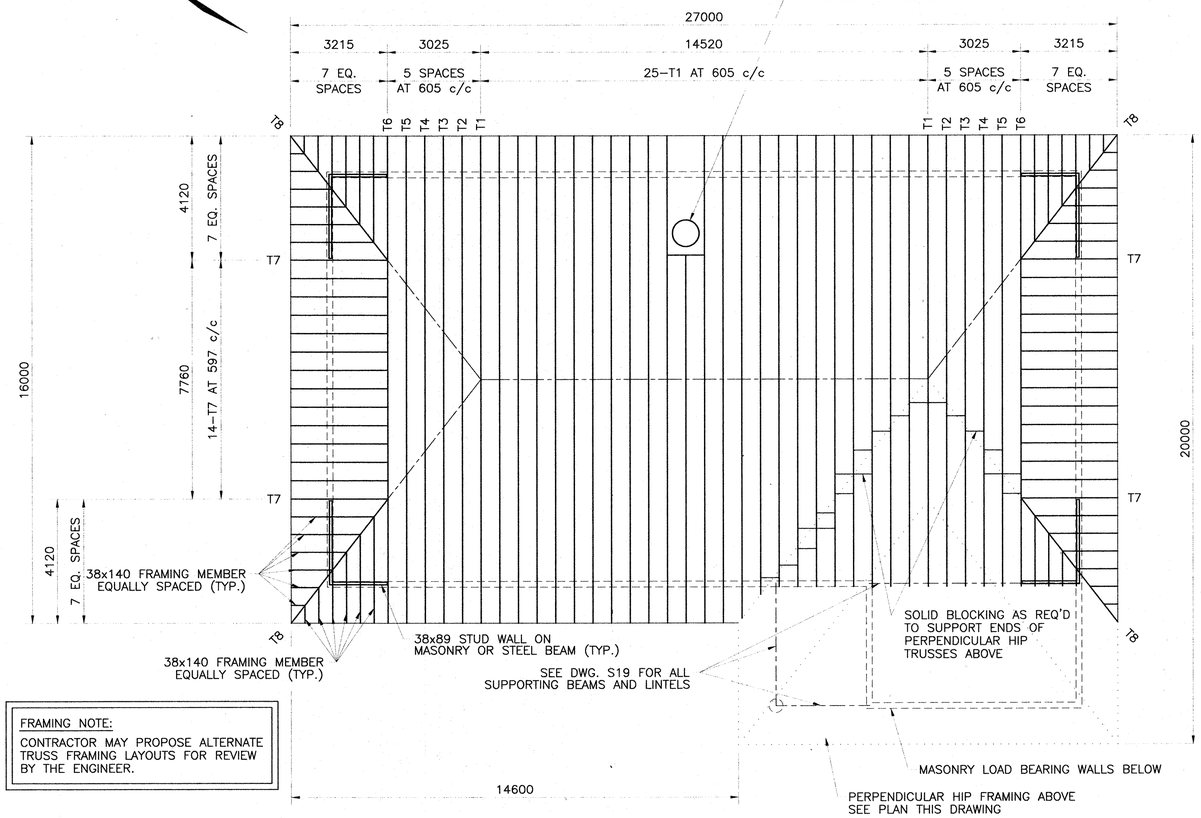

FRAMING NOTE:
CONTRACTOR MAY PROPOSE ALTERNATE TRUSS FRAMING LAYOUTS FOR REVIEW BY THE ENGINEER.

MAIN ROOF FRAMING PLAN
1:100

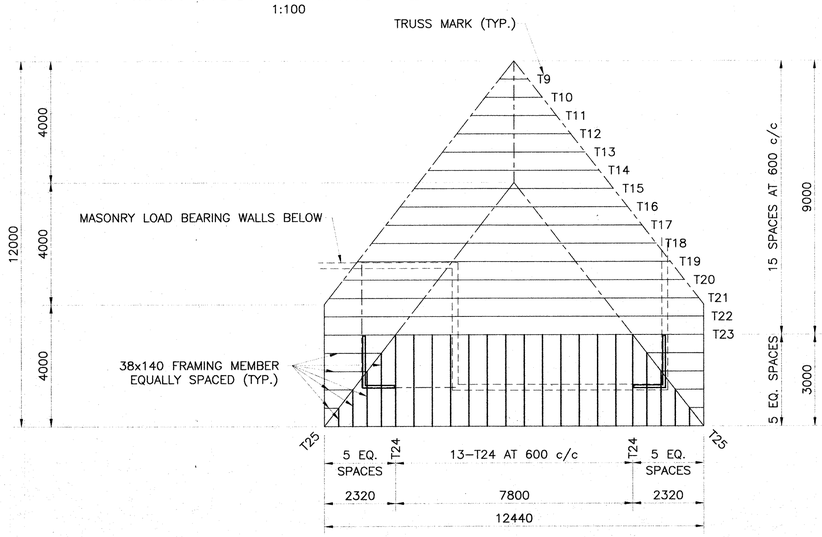

PERPENDICULAR HIP FRAMING PLAN
1:100

No.	Date	Revision
4	MARCH/98	AS BUILT
3	SEPT. 28/95	ISSUED FOR TENDER
2	SEPT. 15/95	ISSUED FOR REVIEW
1	JAN. 16/95	ISSUED FOR M.O.E.E. APPROVAL

McNEELY ENGINEERING CONSULTANTS LTD.

Owner: TOWNSHIP OF OSNABRUCK

Project: INGLESIDE SEWAGE TREATMENT PLANT
O.C.W.A. SEWAGE WORKS PROJECT No. 40-0797

Title: CONTROL BUILDING
ROOF FRAMING, TRUSS PLANS, and DETAILS

Design	F.J.P.	Scale 1:100		Proj. No. M2544-4	Dwg No.
Drawn	[illegible]	Check	S.T.R.	Date AUG 30/95	S20

NOTES:

- REFER TO GENERAL NOTES, DRAWING S01.
- IN ADDITION TO TRUSS SELF WEIGHT, TRUSS DEAD LOADS SHALL BE AS FOLLOWS:
  - TOP CHORD
    - METAL ROOFING : 0.10 kN/m²
    - PLYWOOD SHEATHING : 0.10 kN/m²
    - 0.20 kN/m²
  - BOTTOM CHORD
    - BATT INSULATION : 0.15 kN/m²
    - STRAPPING : 0.05 kN/m²
    - DRYWALL CEILING : 0.13 kN/m²
    - SUSPENDED CEILING : 0.17 kN/m²
    - MECH. & ELEC. ALLOWANCE : 0.15 kN/m²
    - 0.65 kN/m²
- TRUSS LIVE LOADS, APPLIED TO THE TOP CHORD, SHALL BE AS FOLLOWS:
  - UNIFORM SNOW & RAIN: S = 2.0 kN/m²
  - VALLEY SNOW & RAIN: S = 2.4 kN/m² OR S = 3.0 kN/m² (APPLIED IN ACCORDANCE WITH O.B.C.)
  - NET WIND UPLIFT: U_{NET} = 0.25 kN/m²
- TRUSS BEARINGS SHALL BE FASTENED TO SILL PLATES OR TO BLOCK MASONRY TO RESIST AN UNFACTORED UPLIFT OF 1.4 kN AT EACH END AND TO RESIST HORIZONTAL FORCE OF 3.0 kN.

TRUSS SUMMARY

TRUSS MARK	TYPE	NOMINAL SPAN (mm)*	NUMBER REQUIRED	SHAPE
T1	TRIANGULAR	13450	25	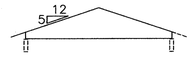
T2-T6	HIP	13450	10	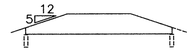
T7	MONO	1900	28	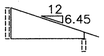
T8	MONO	3000	4	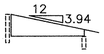
T9-T14	TRIANGULAR	N/A	6	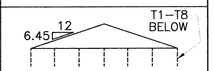
T15-T19	HIP	N/A	5	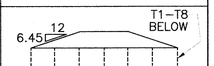
T20-T23	HIP	10000	4	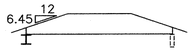
T24	MONO	1800	14	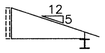
T25	MONO	2100	2	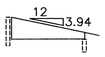

* THIS IS AN APPROXIMATE DIMENSION, INTENDED FOR ESTIMATING PURPOSES ONLY. SEE ARCHITECTURAL DRAWINGS FOR EXACT DIMENSIONS REQUIRED FOR DETAILING AND FABRICATION.

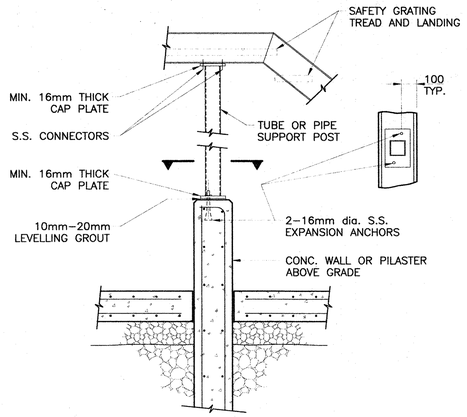

INTERMEDIATE STAIR LANDING OR STRINGER SUPPORT

1:20

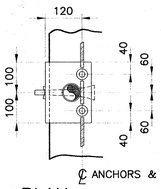

℄ ANCHORS & KICK PLATE

PLAN

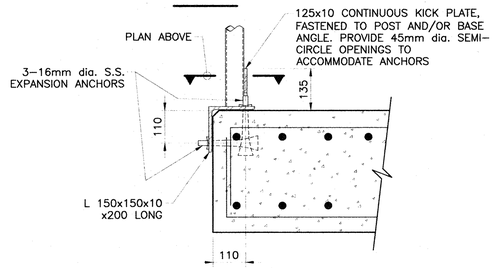

RAILING CONNECTION NEAR EDGE OF SLABS

1:10

No.	Date	Revision
4	MARCH/98	AS BUILT
3	SEPT. 28/95	ISSUED FOR TENDER
2	SEPT. 15/95	ISSUED FOR REVIEW
1	JAN. 16/95	ISSUED FOR M.O.E.E. APPROVAL

McNEELY ENGINEERING CONSULTANTS LTD.

Owner	TOWNSHIP OF OSNABRUCK
Project	INGLESIDE SEWAGE TREATMENT PLANT O.C.W.A. SEWAGE WORKS PROJECT No. 40–0797
Title	TYPICAL DETAILS FOR ALUMINUM FABRICATIONS DETAILS and SECTIONS

Design	F.J.P.	Scale	AS SHOWN	Proj. No.	M2544–4	Dwg No.	S21
Drawn	[illegible]	Check	S.T.R.	Date	AUG 30/95		

NOTES:

- REFER TO GENERAL NOTES, DRAWING S01.
- ALL METAL FABRICATIONS SHOWN ON MECHANICAL PROCESS AND STRUCTURAL DRAWINGS TO BE ALUMINUM U.N.O.
- ALL EXTRUDED SHAPES, ROLLED SHAPES, GRATING, PLATES ETC. TO BE ALUMINUM.
- ALL CONNECTORS INTO CONCRETE TO BE STAINLESS STEEL.
- ALL ALUMINUM SURFACES IN CONTACT WITH CONCRETE TO BE COATED WITH BITUMINOUS PAINT.
- ALL GRATING TO BE FASTENED TO FRAMES WITH SADDLE CLIPS UNLESS APPROVED OTHERWISE.
- EXPOSED GRATING EDGES TO BE BANDED.
- CONTRACTOR MAY SUBSTITUTE DIFFERENT ROLLED OR EXTRUDED SECTION SHAPES FOR THOSE SHOWN ON THIS DRAWING FOR REVIEW. HOWEVER, ALL ELEMENTS OF A SIMILIAR NATURE (eg. TOP AND SIDE MOUNTED CATWALK FRAMES) SHALL ALL BE FABRICATED OF THE SAME SECTION TYPES THROUGHOUT THE PROJECT.

GASKETS SHALL BE 5mm THICK NEOPRENE IN ACCORDANCE WITH OPSS 1202. WIDTH TO BE EQUAL TO CONTACT WIDTH OF METAL PARTS BEING SEPARATED.

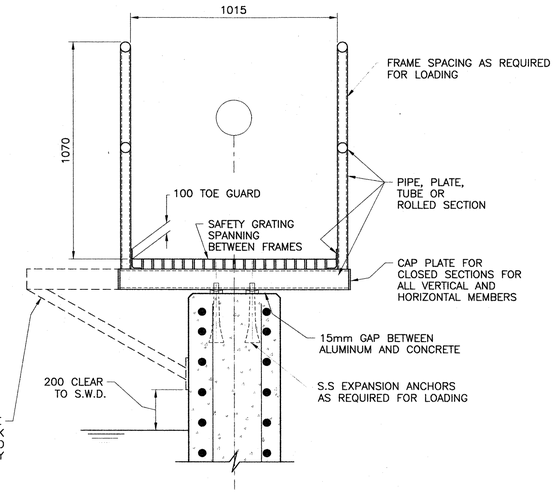

CATWALK CENTRED OVER CONCRETE WALL

1:15

AS BUILT

NOTE: REVISED "AS–BUILT" DRAWING. THIS DRAWING HAS BEEN REVISED TO INCORPORATE CHANGES AS INDICATED IN THE CONTRACTOR'S MARKED UP DRAWINGS. CHANGES DONE BY OWNER/OCWA WITHOUT THE CONSULTANT'S INVOLVEMENT ARE NOT INCLUDED ON THE DRAWINGS. CONTRACTOR'S DRAWINGS ARE NOT VERIFIED ON SITE BY ENGINEER. THE ENGINEER DOES NOT TAKE RESPONSIBILITY FOR INFORMATION ON THIS DRAWING THAT IS IN CONFLICT WITH THE EXISTING CONDITION DUE TO INACCURATE OR MISSING INFORMATION ON SOURCE DOCUMENTS PROVIDED.

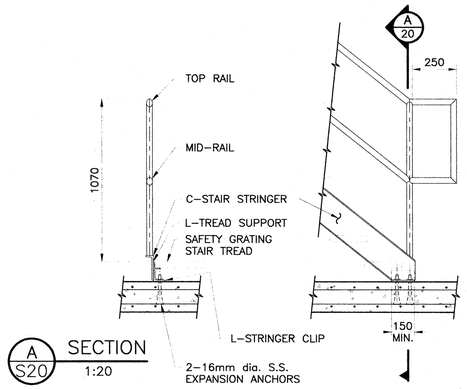

BASE OF STAIRS AND STEP–OVERS

1:20

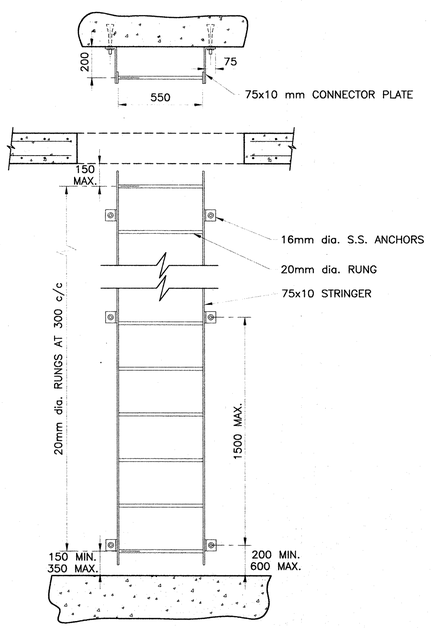

LADDER

1:20

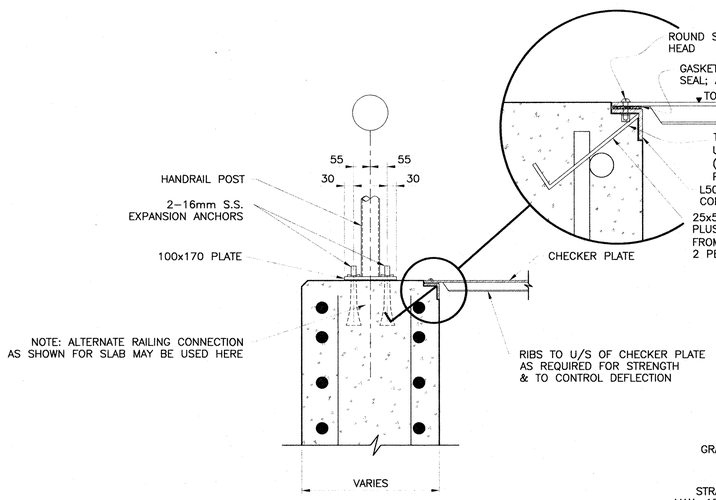

CHECKER PLATE TROUGH COVER AND HANDRAIL SUPPORT ON WALL

1:10

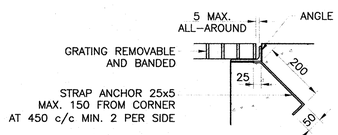

GRATING THICKNESS	ANGLE DESIGNATION
45 THK.	L 50x50x6
40 THK.	L 45x45x6
30 THK.	L 55x35x6
25 THK.	L 25x25x5
20 THK.	L 25x25x5

GRATING SUPPORT FRAMES

N.T.S.

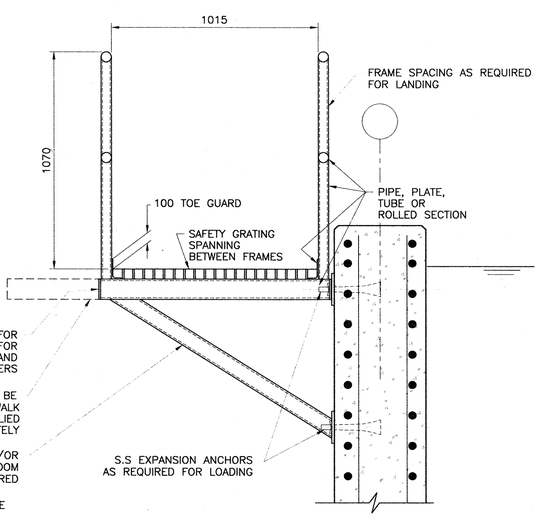

SIDE MOUNTED CATWALK OR LANDING SUPPORT

1:15

NOTE: SIDE MOUNTED CANISTER PLATFORMS SIMILIAR

NOTE

THIS DRAWING DOES NOT REPRESENT AS-BUILT CONDITIONS.

No.	Date	Revision
3	OCTOBER/95	ISSUED FOR TENDER
2	SEPT 15/95	ISSUED FOR REVIEW
1	JAN 16/95	ISSUED FOR M.O.E.E. APPROVAL

McNEELY ENGINEERING CONSULTANTS LTD.

Owner	TOWNSHIP OF OSNABRUCK
Project	INGLESIDE SEWAGE TREATMENT PLANT O.C.W.A. SEWAGE WORKS PROJECT No. 40-0797
Title	MECHANICAL (H.V.A.C.) LEGEND

Design	R.G.	Scale		Proj. No. M2544-4	Dwg No. M-1
Drawn	GMc	Check	R.G.	Date SEPT 15/95	

HEATING AND COOLING

- SUPPLY LINE
- RETURN LINE
- HWS — HOT WATER SUPPLY
- CWS — COLD WATER SUPPLY
- UP FEED PIPE
- DOWN FEED PIPE
- CAP ON END OF PIPE
- HEATER
- REDUCER (CONCENTRIC)
- REDUCER (ECCENTRIC)
- STRAINER (Y)
- FLANGED CONNECTION
- UNION
- ANCHORING POINT
- IN LINE PUMP
- GATE
- GLOBE
- FLOW BALANCING VALVE
- PRESSURE REDUCTION VALVE
- 2 WAY CONTROL VALVE
- SAFETY RELIEF
- CHECK VALVE
- BACKFLOW PREVENTOR

H.V.A.C.

- SUPPLY AIR DUCT SECTION
- RETURN OR EXHAUST AIR SECTION
- SUPPLY AIR DUCT
- RETURN OR EXHAUST AIR DUCT
- CANVAS EXPANSION JOINT
- DUCT TURNING VANES
- DIFFUSER (HORIZONTAL)
- DIFFUSER (VERTICAL)
- BALANCING DAMPER
- LOUVER
- DAMPER (MOTORIZED)
- AIR VENT
- CHIMNEY (VENT) FOR GAS FIRED UNITS
- EXHAUST VENTILATOR
- INTAKE LOUVRE HOUSING VENTILATOR
- GRILL
- CORNER HOOD
- SUPPLY GRILL
- RETURN GRILL
- CEILING EXHAUST FAN
- UH— UNIT HEATER
- EX— WALL MOUNTED FAN
- IN LINE FAN

CONTROL

- T — WALL MOUNTED THERMOSTAT
- WM — WATER METER
- UNIT HEATER
- SW — ON/OFF SWITCH
- ROOF MOUNTED FAN
- WALL MOUNTED FAN
- CONTROL WIRING
- CEILING MOUNTED FAN
- IN LINE FAN

OTHERS

- ROOF DRAIN
- FE — FIRE EXTINGUISHER

ABBREVIATIONS

N.T.S.	NOT TO SCALE
N.O.	NORMALLY OPEN
N.C.	NORMALLY CLOSED
EX	EXHAUST FAN
BH	BASEBOARD HEATER
FC	FAN COIL HEATER
UH	UNIT HEATER
AC	AIR CONDITIONING UNIT
FE	FIRE EXTINGUISHER
RD	ROOF DRAIN

NOTE

THIS DRAWING DOES NOT REPRESENT AS-BUILT CONDITIONS.

0 500 1000mm

NOTES:

1. MOUNT ALL LOUVRES A MINIMUM OF 1.5M ABOVE GRADE
2. SEE DIVISION 16 FOR SPECIFICATIONS ON RADIANT PANELS RP-1 TO RP-3 AND BASEBOARD HEATERS BH-1 TO BH-7 AND FAN COIL UNITS FC-1 TO FC-4
3. SEE DRAWING M-3 FOR DAMPER AND MOTOR IDENTIFICATION.

No.	Date	Revision
3	OCTOBER/95	ISSUED FOR TENDER
2	SEPT 15/95	ISSUED FOR REVIEW
1	JAN 16/95	ISSUED FOR M.O.E.E. APPROVAL

McNEELY ENGINEERING CONSULTANTS LTD.

Owner	TOWNSHIP OF OSNABRUCK
Project	INGLESIDE SEWAGE TREATMENT PLANT O.C.W.A. SEWAGE WORKS PROJECT No. 40-0797
Title	CONTROL BUILDING HVAC EQUIPMENT LAYOUT

Design	R.G.	Scale	AS SHOWN	Proj. No. M2544-4	Dwg No. M-2
Drawn	GMc	Check	R.G.	Date SEPT 15/95	

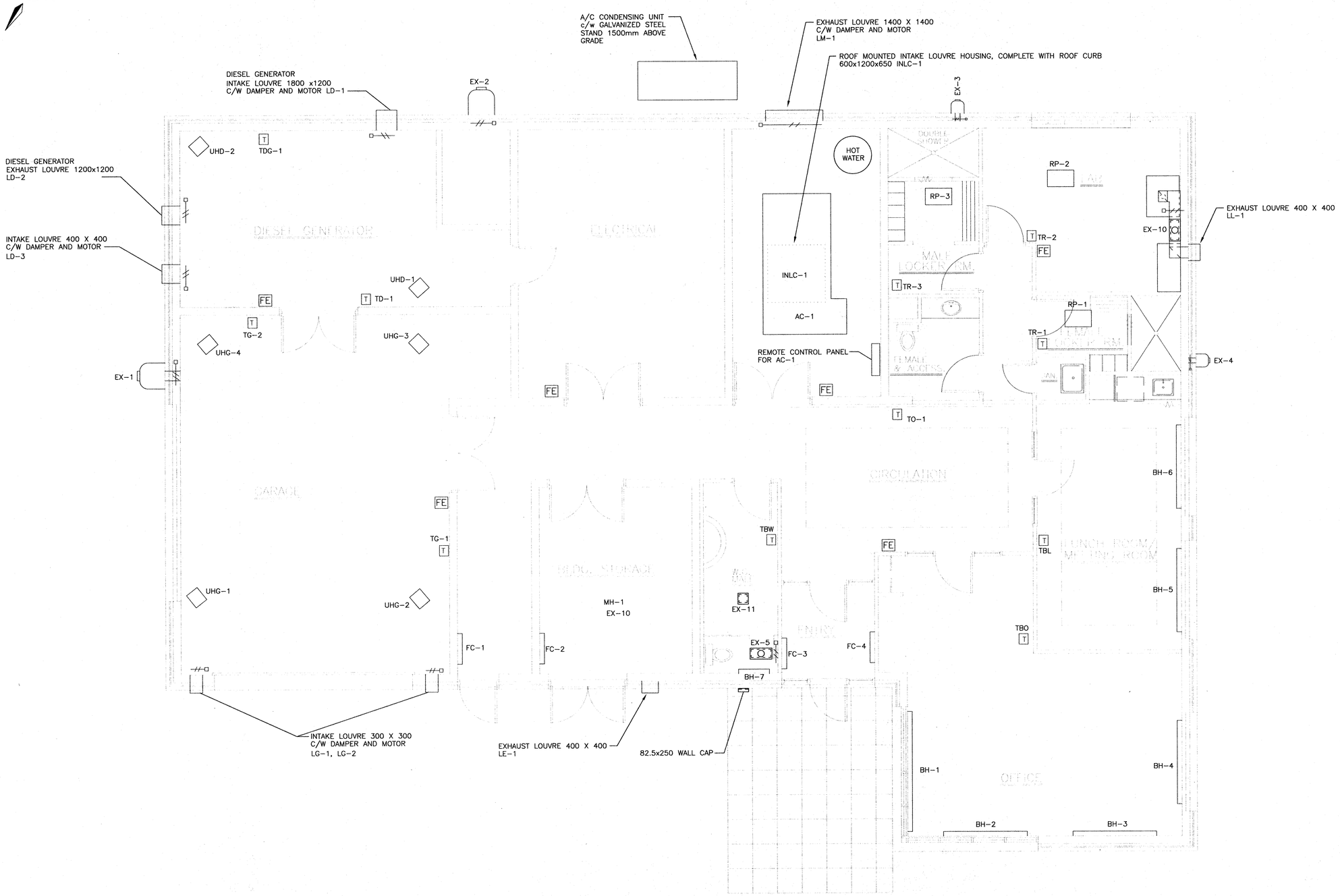

NOTES:

1. DAMPERS SIZES TO MATCH RESPECTIVE LOUVRE, FAN AND DUCT SIZES.
2. INSULATE ALL DUCT WORK.
3. ALL DUCT WORK TO BE GALVANIZED STEEL.
4. SEE SPECIFICATION SECTION 15942 FOR SIZE AND FLOWS FOR:

   DIFFUSERS – DF's
   RETURN AIR REGISTERS – RAR's
   SUPPLY AIR REGISTERS – SAR's
   RETURN AIR GRILLES – RAG's

0 500 1000mm

NOTE
THIS DRAWING DOES NOT REPRESENT AS-BUILT CONDITIONS.

No.	Date	Revision
3	OCTOBER/95	ISSUED FOR TENDER
2	SEPT 15/95	ISSUED FOR REVIEW
1	JAN 16/95	ISSUED FOR M.O.E.E. APPROVAL

REGISTERED PROFESSIONAL ENGINEER R. Goubko PROVINCE OF ONTARIO
REGISTERED PROFESSIONAL ENGINEER D.W. Lishman PROVINCE OF ONTARIO

McNEELY ENGINEERING CONSULTANTS LTD.

Owner	TOWNSHIP OF OSNABRUCK
Project	INGLESIDE SEWAGE TREATMENT PLANT O.C.W.A. SEWAGE WORKS PROJECT No. 40-0797
Title	CONTROL BUILDING DUCT LAYOUT

Design	R.G.	Scale	AS SHOWM	Proj. No. M2544-4	Dwg No. M-3
Drawn	GMc	Check	R.G.	Date SEPT 15/95	

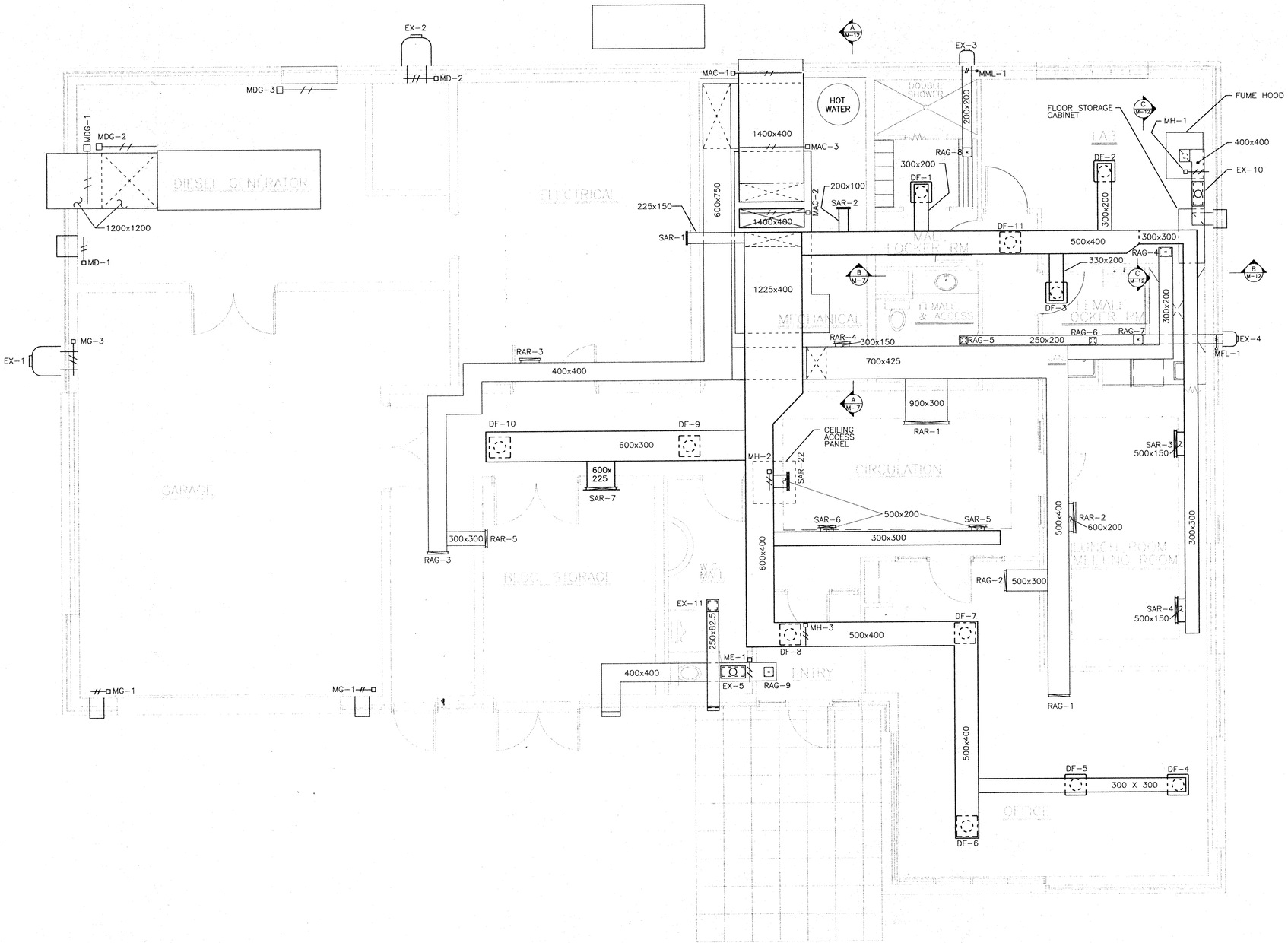

NOTES:

1. INSTALL ALL GAS FIRED EQUIPMENT, PIPING AND CHIMNEYS AS PER CAN/CGA-B149.1-M86 AND SECTION 15482 OF THE SPECIFICATIONS.
2. CO-ORDINATE ALL CHIMNEY INSTALLATION WITH ROOFING CONTRACTOR.
3. GAS PIPING ———————
   DIESEL PIPING — — — — —

NOTE
THIS DRAWING DOES NOT REPRESENT AS-BUILT CONDITIONS.

0 500 1000mm

No.	Date	Revision
3	OCTOBER/95	ISSUED FOR TENDER
2	SEPT 16/95	ISSUED FOR M.O.E.E. APPROVAL
1	JAN 16/95	ISSUED FOR M.O.E.E. APPROVAL

McNEELY ENGINEERING CONSULTANTS LTD.

Owner	TOWNSHIP OF OSNABRUCK
Project	INGLESIDE SEWAGE TREATMENT PLANT O.C.W.A. SEWAGE WORKS PROJECT No. 40-0797
Title	CONTROL BUILDING GAS & DIESEL FUEL SUPPLY

Design	R.G.	Scale	AS SHOWN	Proj. No.	M2544-4	Dwg No.	M-4
Drawn	GMc	Check	R.G.	Date	SEPT 15/95		

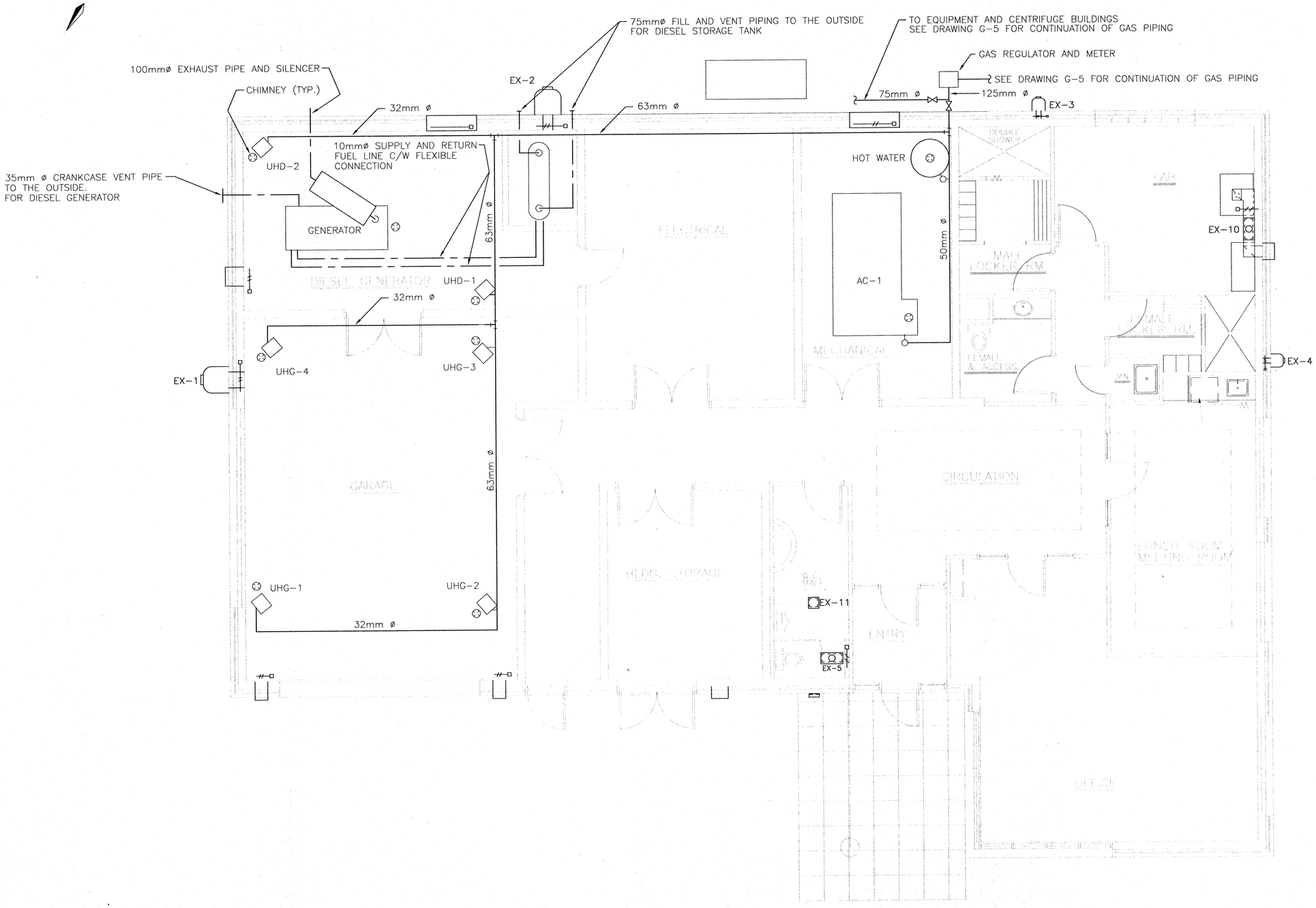

NOTES:

1. INSTALL ALL WATER SUPPLY, DRAINS, VENTS AND PIPING IN ACCORDANCE WITH CANADIAN AND PROVINCIAL PLUMBING CODE AND LOCAL AUTHORITY.
2. CO-ORDINATE ALL VENTS WITH ROOFING CONTRACTOR.
3. ALL FLOOR DRAIN SIZE AS PER SECTION 15430 OF THE SPECIFICATION.
4. ALL WATER SUPPLY CONNECTION TO FIXTURE TO BE 12.5mm UNLESS NOTED OTHERWISE.
5. INSTALL GATE VALVES TO ALL HOT & COLD WATER PIPING BEFORE CONNECTING TO FIXTURES.

0 500 1000mm

NOTE

THIS DRAWING DOES NOT REPRESENT AS-BUILT CONDITIONS.

No.	Date	Revision
3	OCTOBER/95	ISSUED FOR TENDER
2	SEPT 15/95	ISSUED FOR REVIEW
1	JAN 16/95	ISSUED FOR M.O.E.E. APPROVAL

R.G. STEVENS PROFESSIONAL ENGINEER R. Goubko Oct 6/95 PROVINCE OF ONTARIO

D.W. LISHMAN PROFESSIONAL ENGINEER D.W. Lishman Oct 6/95 PROVINCE OF ONTARIO

McNEELY ENGINEERING CONSULTANTS LTD.

Owner: TOWNSHIP OF OSNABRUCK

Project: INGLESIDE SEWAGE TREATMENT PLANT
O.W.C.A. SEWAGE WORKS PROJECT No. 40-0797

Title: CONTROL BUILDING
PLUMBING

Design	R.G.	Scale	AS SHOWN	Proj. No.	M2544-4	Dwg No.
Drawn	GMC	Check	R.G.	Date	SEPT 15/95	M-5

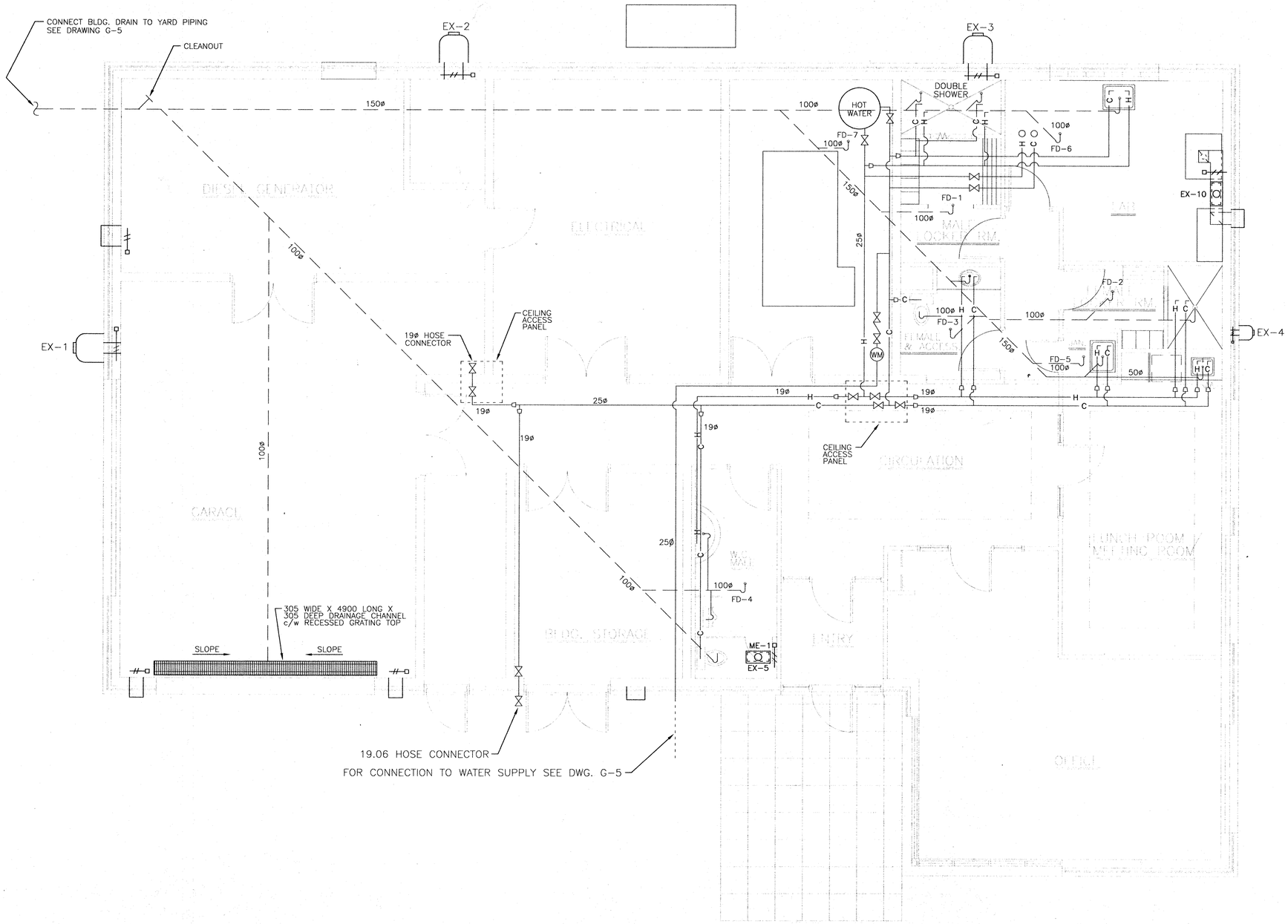

NOTES:

1. SEE SPECIFICATION SECTION 15942 FOR SIZE AND FLOW FOR
   SUPPLY AIR REGISTERS – SAR'S
   RETURN AIR REGISTERS – RAR'S
   TRANSFER GRILLS – TG'S
2. SEE SPECIFICATION SECTION 15941 FOR SIZE AND FLOW FOR
   EXHAUST VENTILATOR'S – INVB'S
   INTAKE LOUVRE HOUSING INLB'S
3. ALL DUCT WORK TO BE ALUMINUM

NOTE

THIS DRAWING DOES NOT REPRESENT AS-BUILT CONDITIONS.

0 500 1000mm

No.	Date	Revision
3	OCTOBER/95	ISSUED FOR TENDER
2	SEPT 15/95	ISSUED FOR REVIEW
1	JAN 16/95	ISSUED FOR M.O.E.E. APPROVAL

McNEELY ENGINEERING CONSULTANTS LTD.

Owner	TOWNSHIP OF OSNABRUCK
Project	INGLESIDE SEWAGE TREATMENT PLANT O.C.W.A. SEWAGE WORKS PROJECT No. 40-0797
Title	BLOWER/POLYMER/PUMP ROOMS–DUCTING H & V PLAN & SECTION

Design	RG	Scale	AS SHOWN	Proj. No.	M2544-4	Dwg No.	M-6
Drawn	GMc	Check	RG	Date	SEPT 15/95		

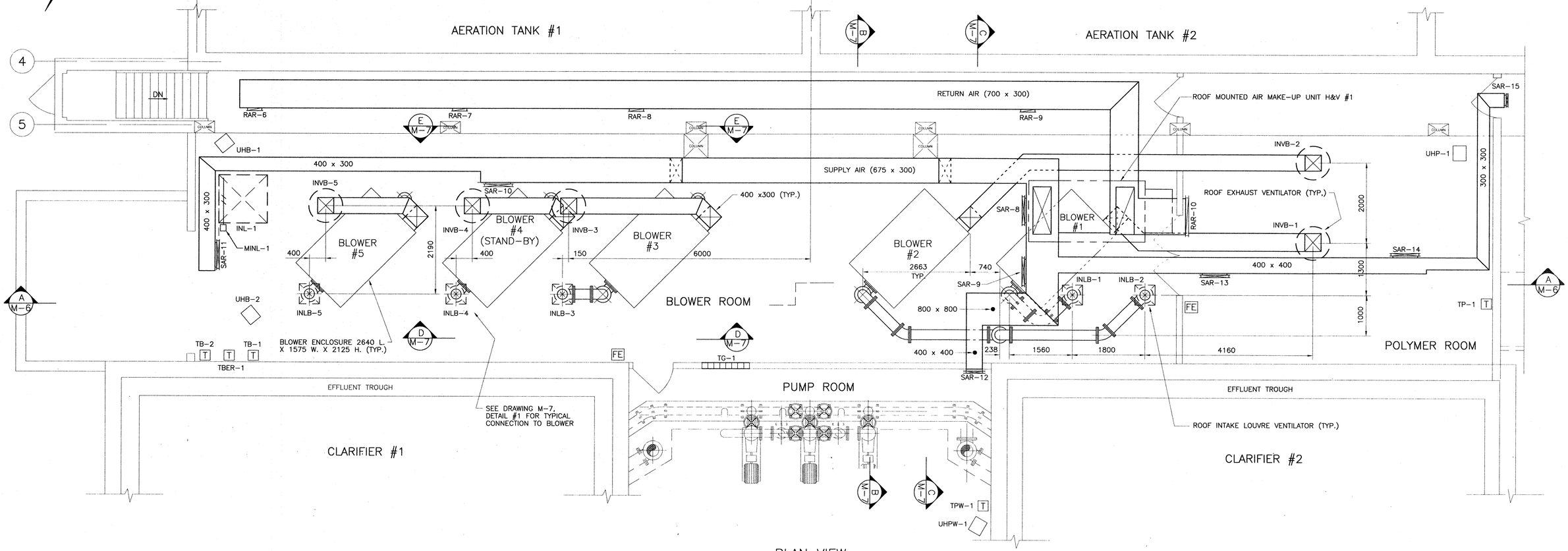

PLAN VIEW

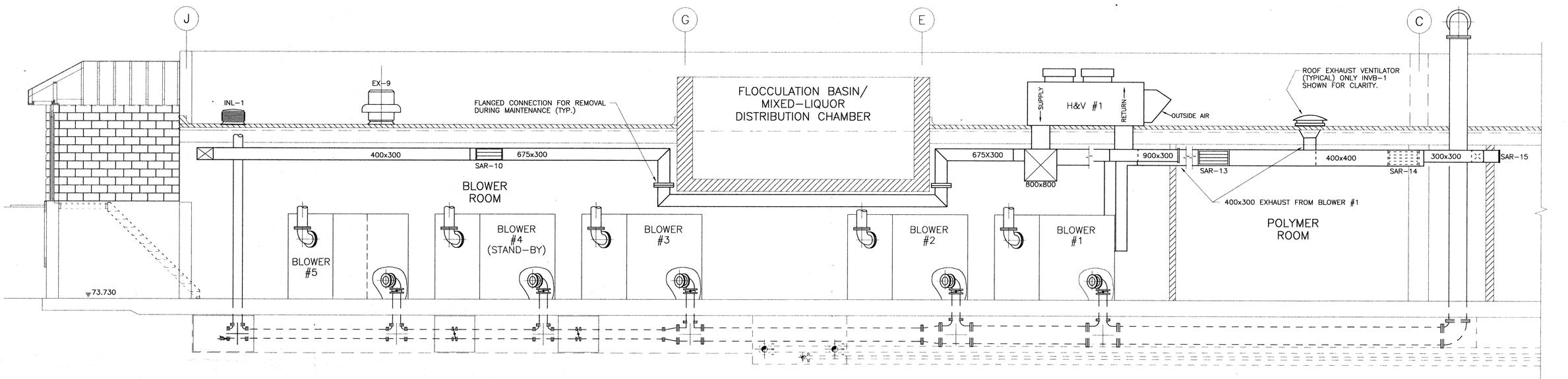

SECTION A M-6
1:50

NOTE

THIS DRAWING DOES NOT REPRESENT AS-BUILT CONDITIONS.

No.	Date	Revision
3	OCTOBER/95	ISSUED FOR TENDER
2	SEPT 15/95	ISSUED FOR REVIEW
1	JAN 16/95	ISSUED FOR M.O.E.E. APPROVAL

McNEELY ENGINEERING CONSULTANTS LTD.

Owner	TOWNSHIP OF OSNABRUCK
Project	INGLESIDE SEWAGE TREATMENT PLANT O.C.W.A. SEWAGE WORKS PROJECT No. 40-0797
Title	BLOWER ROOM SECTIONS

Design	R.G.	Scale	AS SHOWN	Proj. No. M2544-4	Dwg No. M-7
Drawn	GMc	Check	R.G.	Date SEPT 15/95	

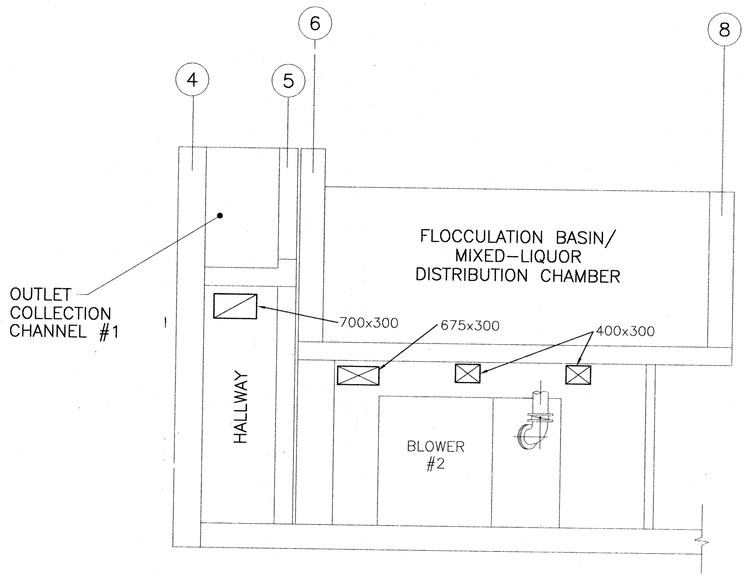

SECTION B (M-6)
1 :50

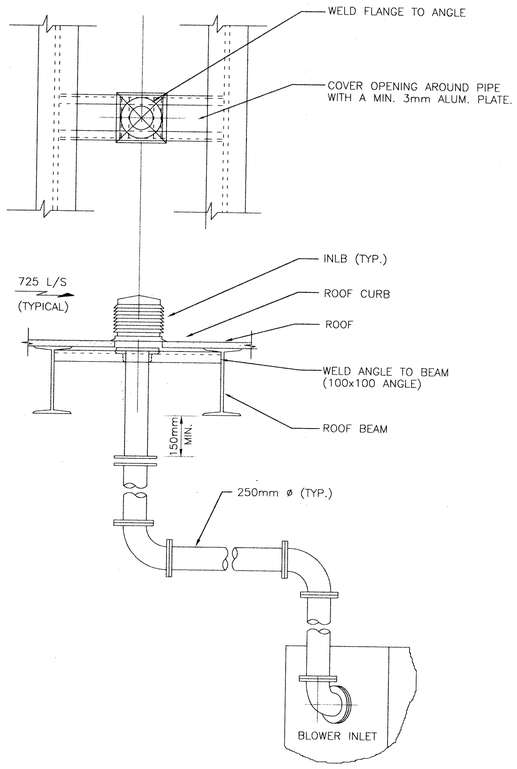

DETAIL #1
N.T.S.

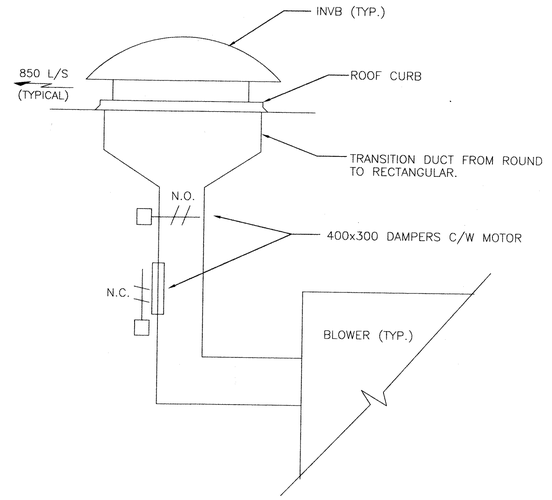

DETAIL #2
N.T.S.

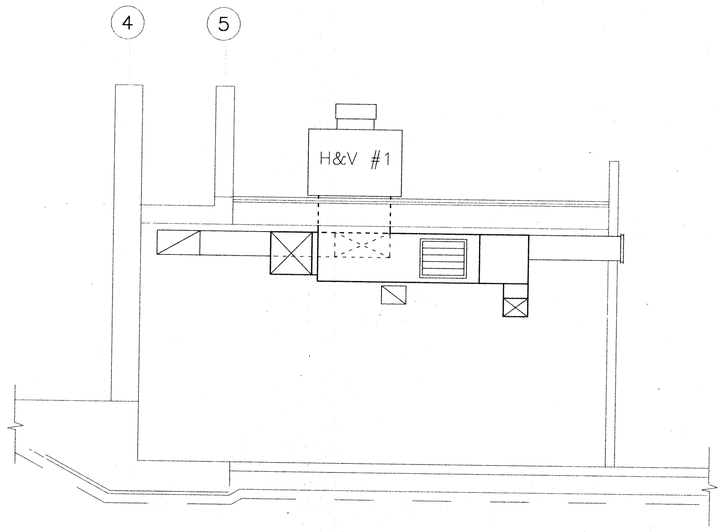

SECTION C (M-6)
1 :50

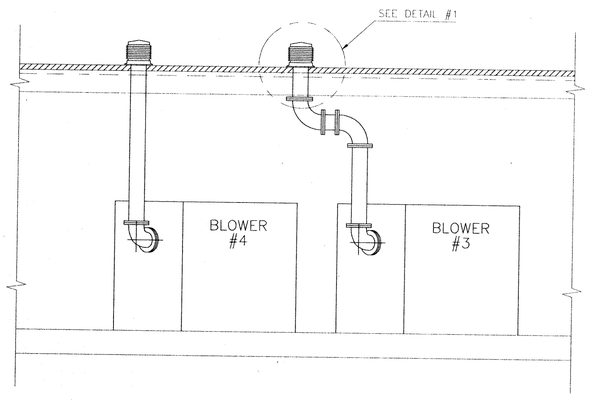

SECTION D (M-6)
N.T.S.

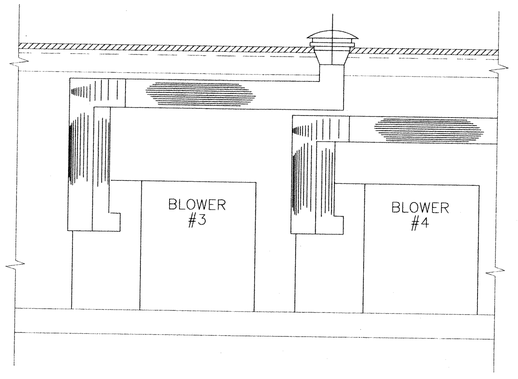

SECTION E (M-6)
N.T.S.

0 500 1000mm

NOTE
THIS DRAWING DOES NOT REPRESENT AS-BUILT CONDITIONS.

NOTES:

1. SEE SPECIFICATION SECTION 15942 FOR SIZE AND FLOW FOR
   SUPPLY AIR REGISTERS – SAR'S
   RETURN AIR REGISTERS – RAR'S
   TRANSFER GRILLS – TG'S

2. ALL DUCT WORK TO BE ALUMINUM

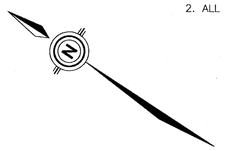

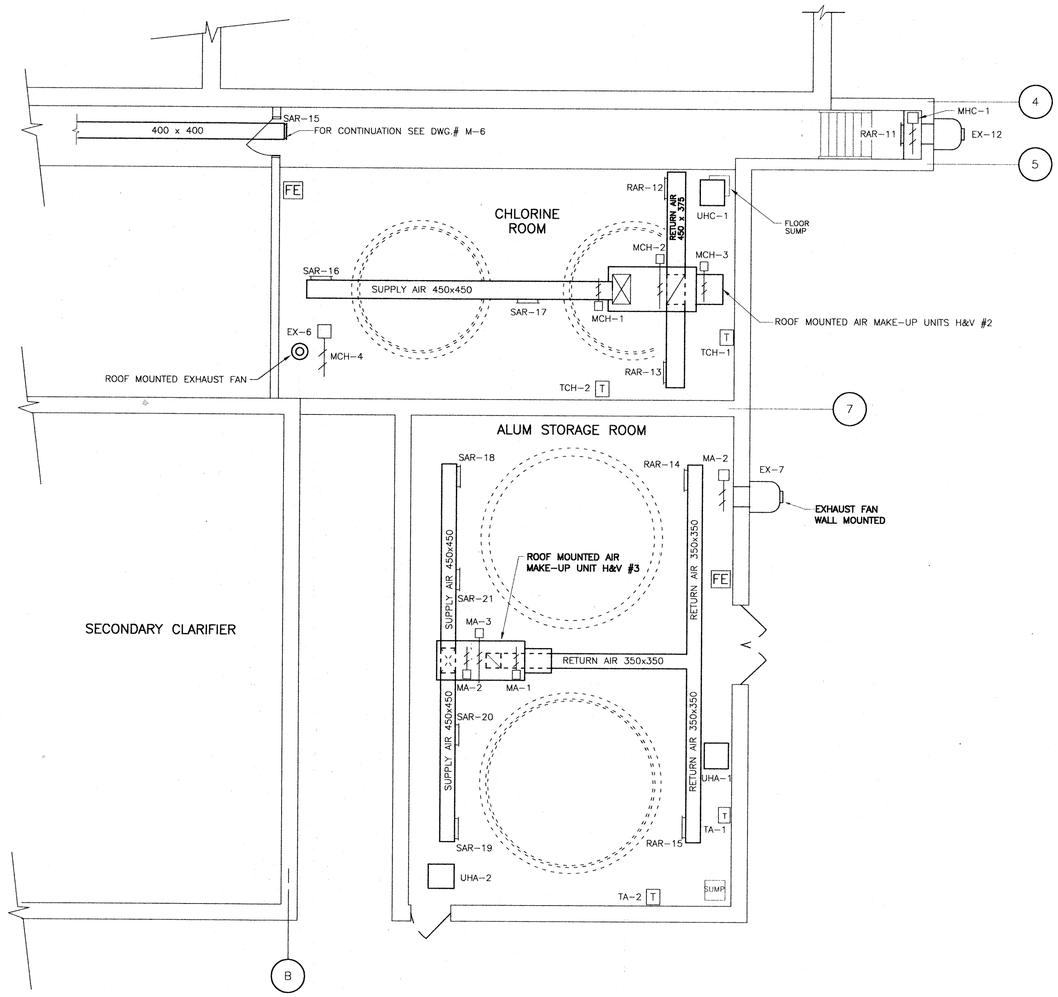

PLAN – CHEMICAL ROOMS

No.	Date	Revision
3	OCTOBER/95	ISSUED FOR TENDER
2	SEPT 15/95	ISSUED FOR REVIEW
1	JAN 16/95	ISSUED FOR M.O.E.E. APPROVAL

REGISTERED PROFESSIONAL ENGINEER R. Goubko PROVINCE OF ONTARIO

REGISTERED PROFESSIONAL ENGINEER D.W. Lishman PROVINCE OF ONTARIO

McNEELY ENGINEERING CONSULTANTS LTD.

Owner	TOWNSHIP OF OSNABRUCK
Project	INGLESIDE SEWAGE TREATMENT PLANT O.C.W.A. SEWAGE WORKS PROJECT No. 40-0797
Title	CHEMICAL ROOMS/CENTRIFUGE BLDG. H & V PLANS

Design	RG	Scale	AS SHOWN	Proj. No. M2544-4	Dwg No. M-8
Drawn	GMc	Check	RG	Date SEPT 15/95	

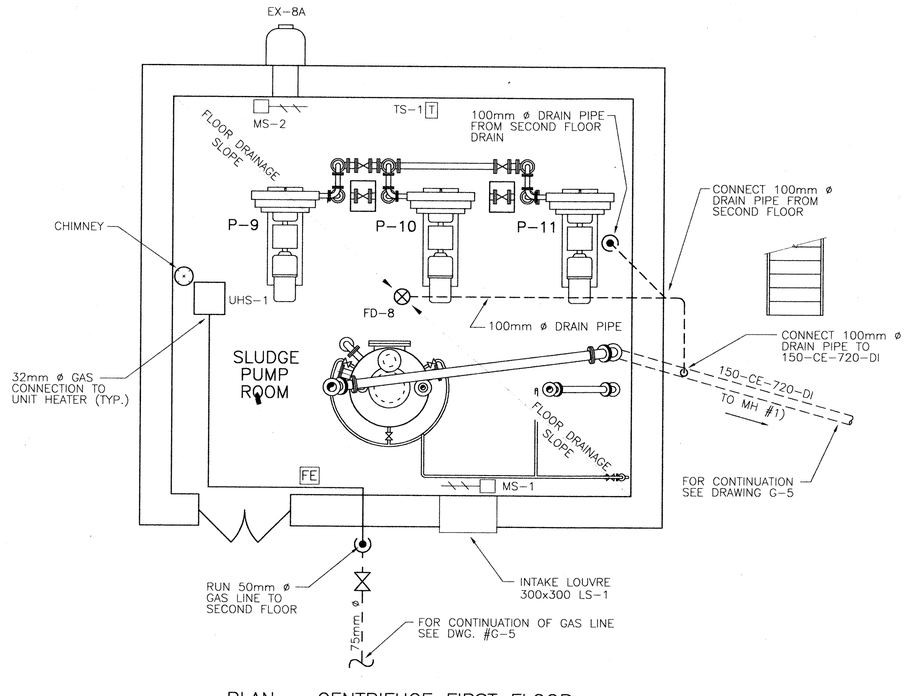

PLAN – CENTRIFUGE FIRST FLOOR

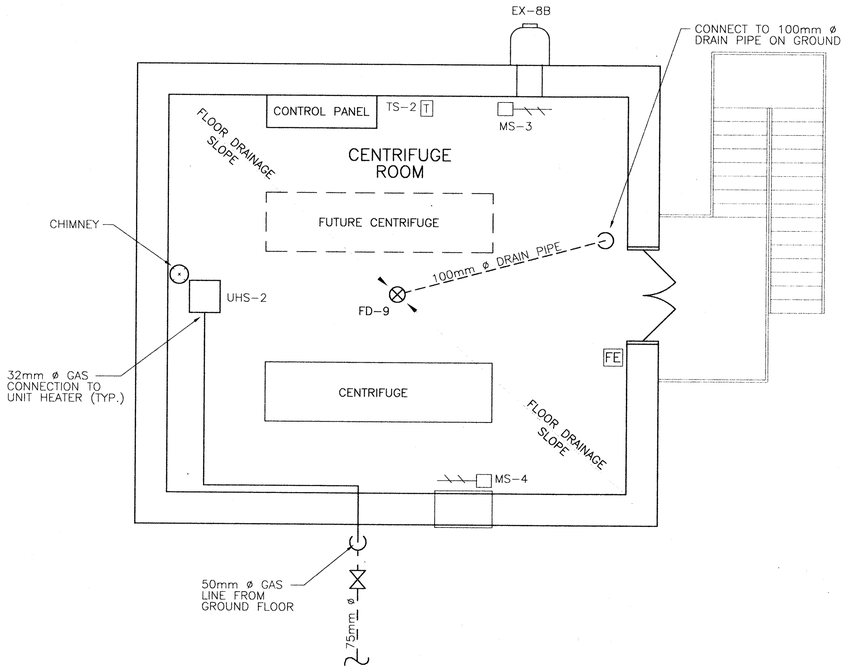

PLAN – CENTRIFUGE SECOND FLOOR

NOTES:

1. INSTALL ALL GAS FIRED EQUIPMENT AND CHIMNEY'S AS PER CAN/CGA-B.09-M86 AND SECTION 15482 OF THE SPECIFICATION.
2. CO-ORDINATE ALL OPENINGS WITH ROOFING CONTRACTOR.
3. INSTALL ALL ROOF DRAINS AND PIPING UNDER THE ROOF PER THE ONTARIO BUILDING CODE. SLOPE ALL PIPING A MINIMUM OF 1 : 100. SEE DRAWING G-5 FOR CONNECTION TO UNDERGROUND DRAINS.

NOTE

THIS DRAWING DOES NOT REPRESENT AS-BUILT CONDITIONS.

No.	Date	Revision
3	OCTOBER/95	ISSUED FOR TENDER
2	SEPT 15/95	ISSUED FOR REVIEW
1	JAN 16/95	ISSUED FOR M.O.E.E. APPROVAL

McNEELY ENGINEERING CONSULTANTS LTD.

Owner	TOWNSHIP OF OSNABRUCK
Project	INGLESIDE SEWAGE TREATMENT PLANT O.C.W.A. SEWAGE WORKS PROJECT No. 40-0797
Title	EQUIPMENT / ALUM BUILDINGS ROOF LAYOUT

Design	RG	Scale	AS SHOWN	Proj. No. M2544-4	Dwg No. M-9
Drawn	GMc	Check	RG	Date SEPT 15/95	

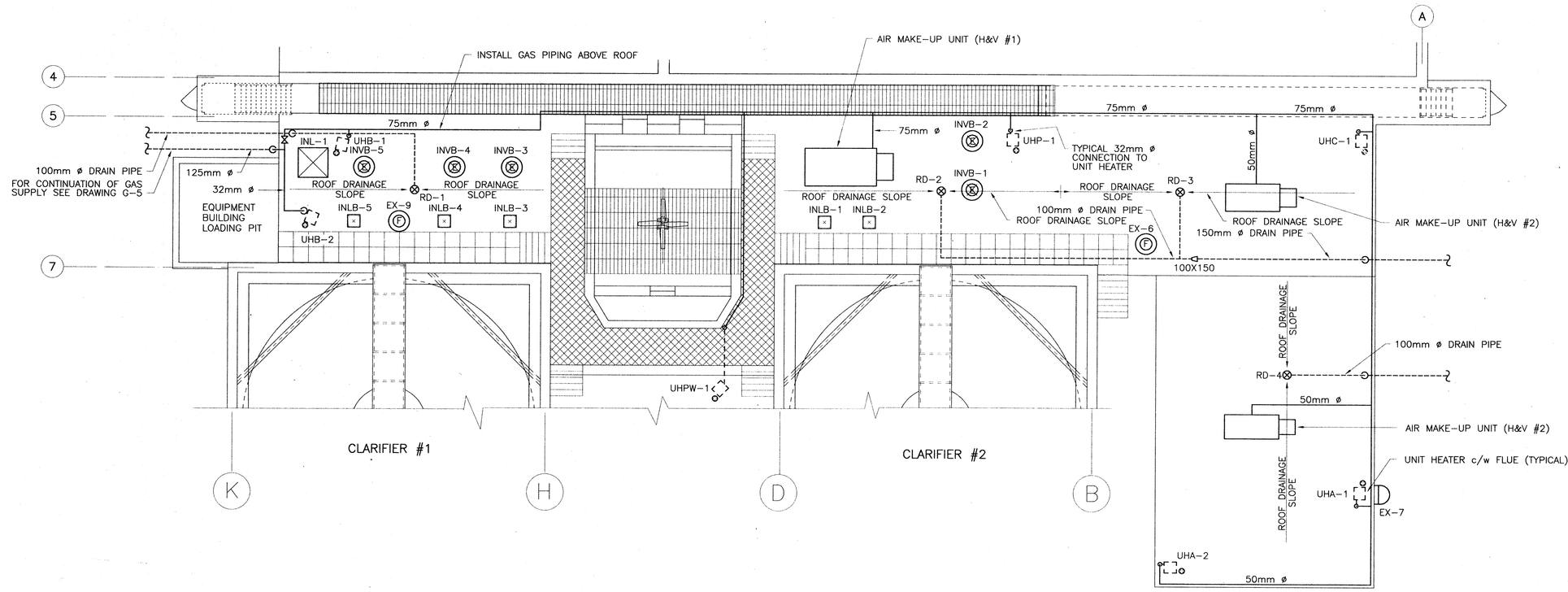

PLAN VIEW
1:100

NOTE

THIS DRAWING DOES NOT REPRESENT AS-BUILT CONDITIONS.

No.	Date	Revision
3	OCTOBER/95	ISSUED FOR TENDER
2	SEPT 15/95	ISSUED FOR REVIEW
1	JAN 16/95	ISSUED FOR M.O.E.E. APPROVAL

REGISTERED PROFESSIONAL ENGINEER R. Goubko PROVINCE OF ONTARIO Oct/6/95

REGISTERED PROFESSIONAL ENGINEER D.W. Lishman PROVINCE OF ONTARIO Oct/6/95

McNEELY ENGINEERING CONSULTANTS LTD.

Owner	TOWNSHIP OF OSNABRUCK
Project	INGLESIDE SEWAGE TREATMENT PLANT O.C.W.A. SEWAGE WORKS PROJECT No. 40-0797
Title	HEATING & VENTILATION SYSTEM CONTROL SCHEMATIC I

Design	R.G.	Scale	NONE	Proj. No. M2544-4	Dwg. No. M-10
Drawn	GMc	Check	R.G.	Date SEPT 15/95	

LUNCH/MEETING ROOM

OFFICE

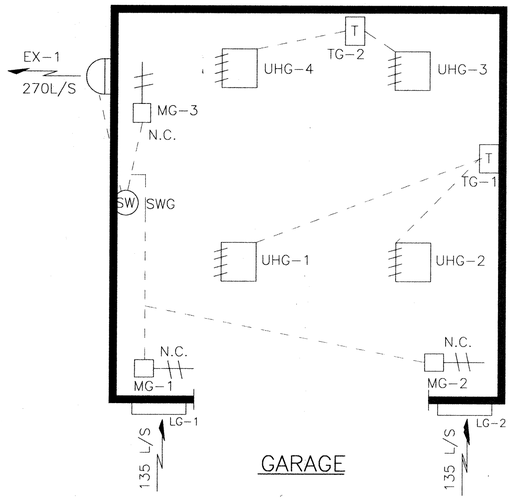

GARAGE

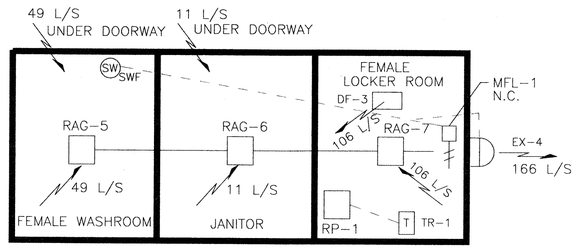

FEMALE LOCKER/WASHROOM

JANITOR

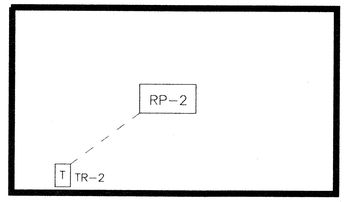

LAB

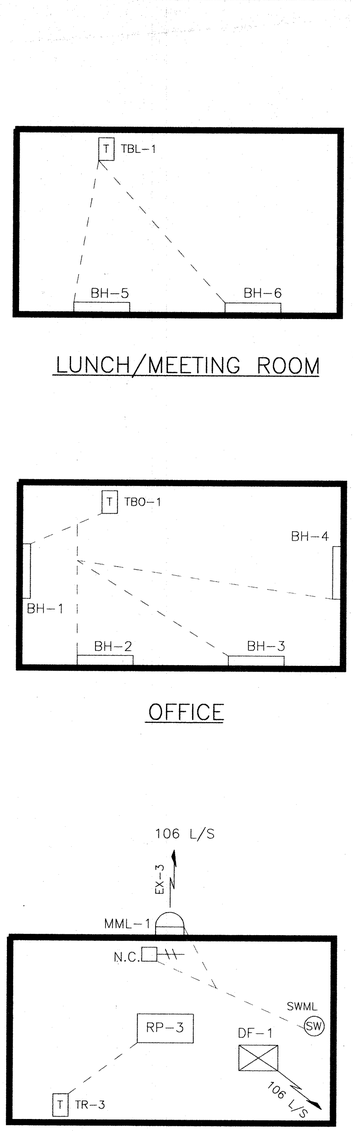

MALE LOCKER ROOM

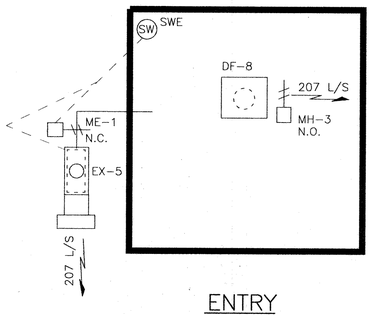

ENTRY

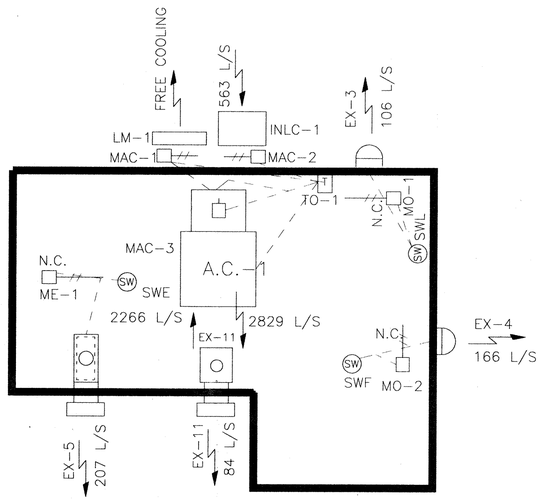

OFFICE AREA

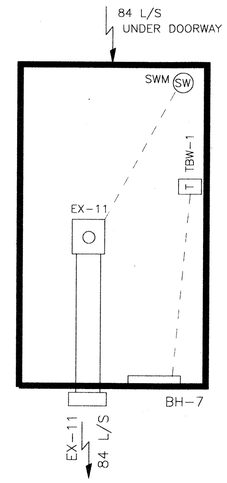

MALE WASHROOM

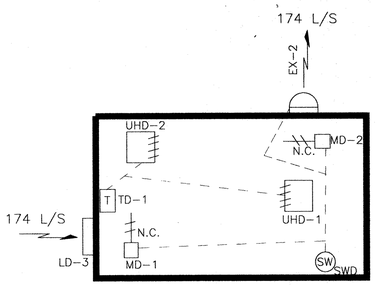

DIESEL GENERATOR ROOM

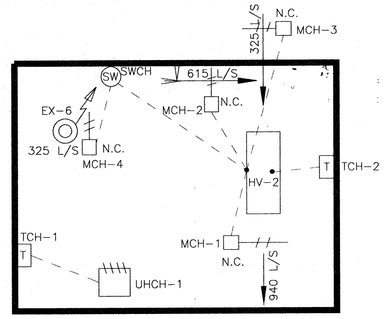

CHLORINE ROOM

NOTE

THIS DRAWING DOES NOT REPRESENT AS-BUILT CONDITIONS.

No.	Date	Revision
3	OCTOBER/95	ISSUED FOR TENDER
2	SEPT 15/95	ISSUED FOR REVIEW
1	JAN 16/95	ISSUED FOR M.O.E.E. APPROVAL

REGISTERED PROFESSIONAL ENGINEER R. Goubko Oct 6/95 PROVINCE OF ONTARIO

REGISTERED PROFESSIONAL ENGINEER D.W. Lishman Oct 6/95 PROVINCE OF ONTARIO

McNEELY ENGINEERING CONSULTANTS LTD.

Owner	TOWNSHIP OF OSNABRUCK
Project	INGLESIDE SEWAGE TREATMENT PLANT O.C.W.A. SEWAGE WORKS PROJECT No. 40-0797
Title	HEATING & VENTILATION SYSTEM CONTROL SCHEMATIC II

Design	R.G.	Scale	NONE	Proj. No. M2544-4	Dwg No.
Drawn	GMc	Check	R.G.	Date SEPT 15/95	M-11

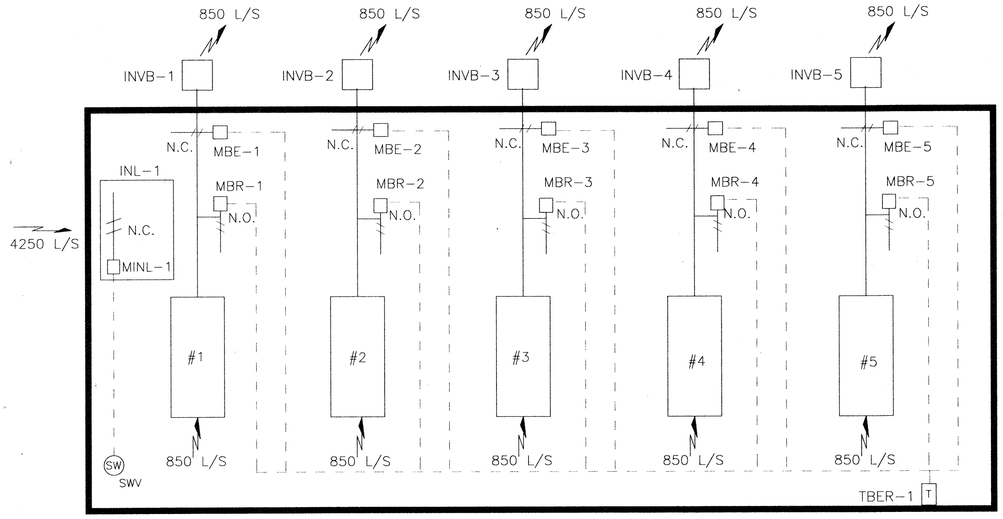

BLOWER VENTILATION

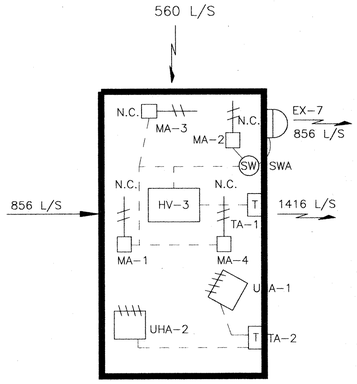

ALUM ROOM

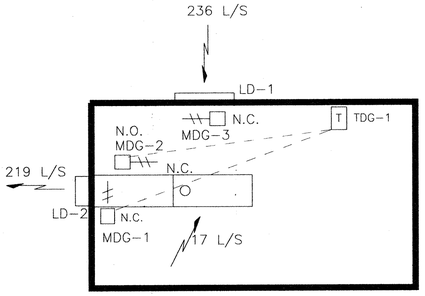

DIESEL GENERATOR EXHAUST

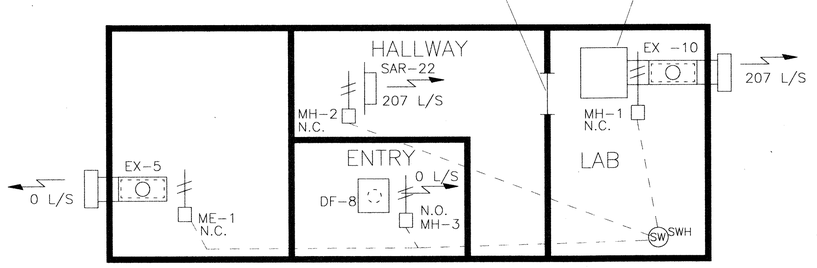

FUME HOOD

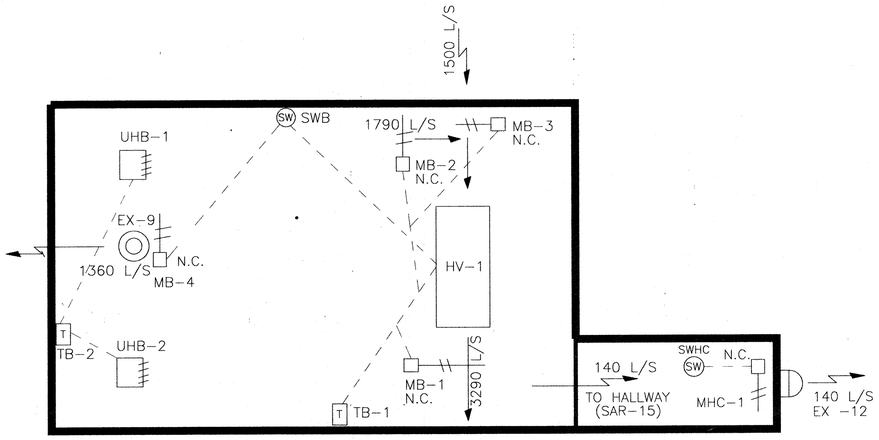

BLOWER ROOM

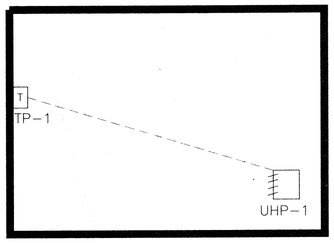

POLYMER ROOM

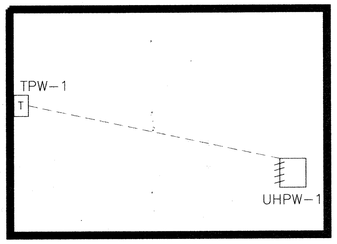

RAS/WAS PUMP ROOM

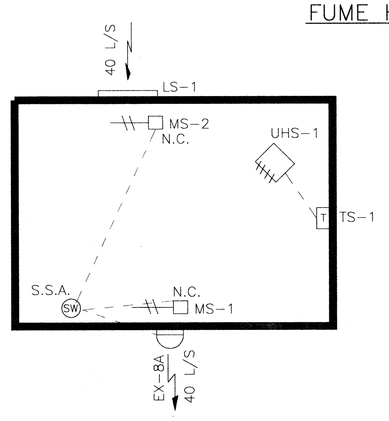

CENTRIFUGE BUILDING
(GROUND FLOOR)

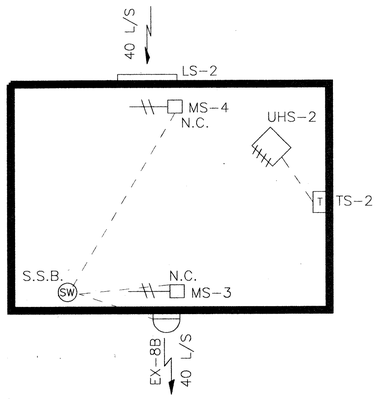

CENTRIFUGE BUILDING
(SECOND FLOOR)

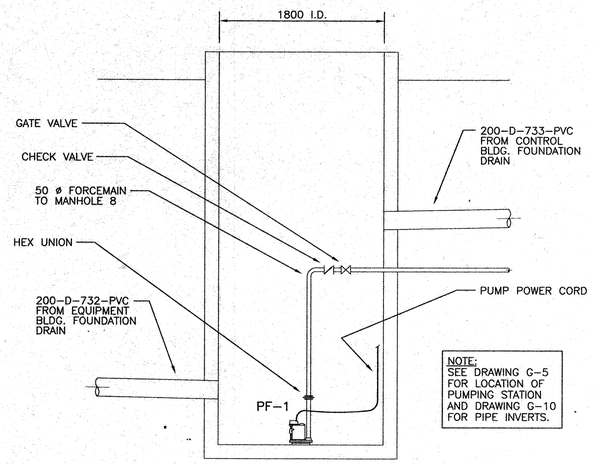

SCHEMATIC – FOUNDATION DRAIN SUMP PUMP STATION

NOTE

THIS DRAWING DOES NOT REPRESENT AS-BUILT CONDITIONS.

No.	Date	Revision
3	OCTOBER/95	ISSUED FOR TENDER
2	SEPT 15/95	ISSUED FOR REVIEW
1	JAN 16/95	ISSUED FOR M.O.E.E. APPROVAL

R. Grubka — Oct 6/95

D.W. Listman — Oct 6/95

McNEELY ENGINEERING CONSULTANTS LTD.

Owner	TOWNSHIP OF OSNABRUCK				
Project	INGLESIDE SEWAGE TREATMENT PLANT O.C.W.A. SEWAGE WORKS PROJECT No. 40-0797				
Title	CONTROL BUILDING DETAILS				
Design	R.G.	Scale	AS SHOWM	Proj. No.	M2544-4
Drawn	GMc	Check	R.G.	Date	SEPT 15/95
				Dwg No.	M-12

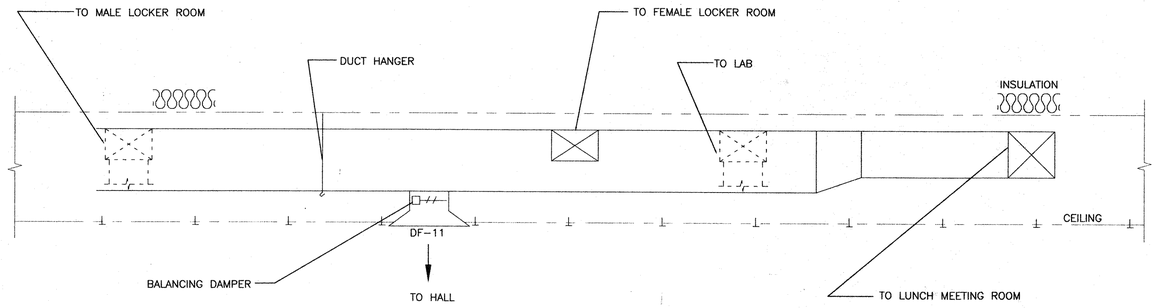

TYPICAL SECTION (B / M-3)

N.T.S.

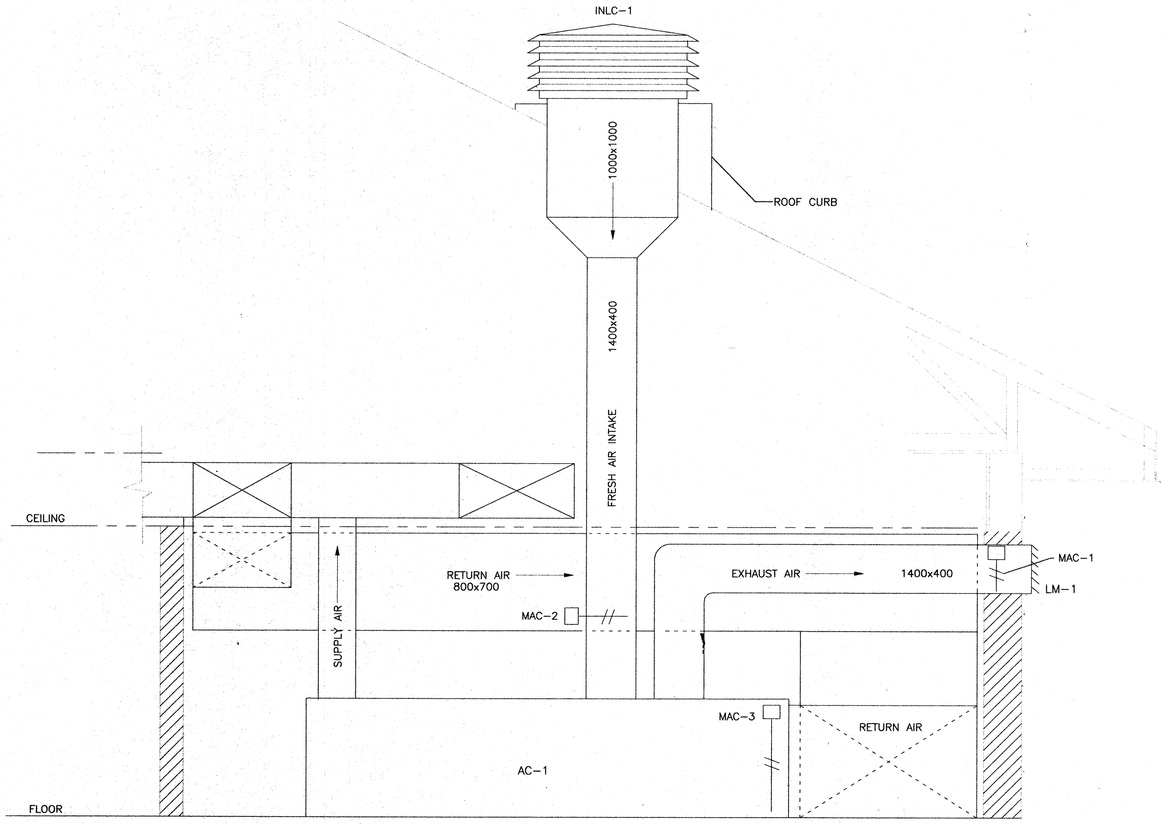

SECTION (A / M-3)

N.T.S.

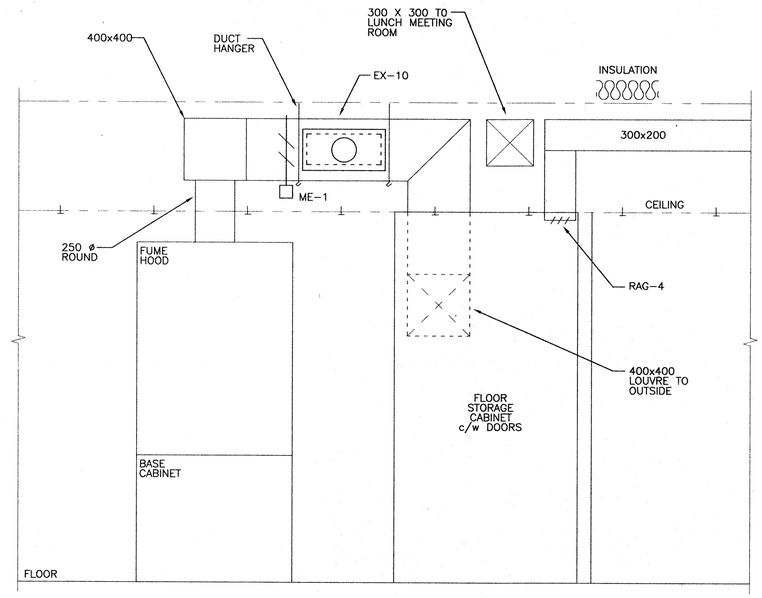

SECTION (C / M-3)

N.T.S.

AS-BUILT

NOTE: REVISED "AS-BUILT" DRAWING. THIS DRAWING HAS BEEN REVISED TO INCORPORATE CHANGES AS INDICATED IN THE CONTRACTOR'S MARKED UP DRAWINGS. CHANGES DONE BY OWNER/OCWA WITHOUT THE CONSULTANT'S INVOLVEMENT ARE NOT INCLUDED ON THE DRAWINGS. CONTRACTOR'S DRAWINGS ARE NOT VERIFIED ON SITE BY ENGINEER. THE ENGINEER DOES NOT TAKE RESPONSIBILITY FOR INFORMATION ON THIS DRAWING THAT IS IN CONFLICT WITH THE EXISTING CONDITON DUE TO INACCURATE OR MISSING INFORMATION ON SOURCE DOCUMENTS PROVIDED.

Wood, Banani & Associates Limited
Consulting Engineers
TEL: (613)591-6050 FAX: 591-9998
EMAIL: wbg@wbgroup.com
260 Terence Matthews Crescent, Suite 202, Kanata, Ontario, K2M 2C7

No.	Date	Revision
4	JAN. 98	AS-BUILT
3	OCT. 95	ISSUED FOR TENDER
2	SEPT. 15/95	ISSUED FOR REVIEW
1	JAN. 16/95	ISSUED FOR M.O.E.E. APPROVAL

McNEELY ENGINEERING CONSULTANTS LTD.

Owner: TOWNSHIP OF OSNABRUCK

Project: INGLESIDE SEWAGE TREATMENT PLANT
O.C.W.A. SEWAGE WORKS PROJECT No. 40-0797

Title: SITE PREPARATION WORK AND LEGEND

Design	R.D.	Scale	AS SHOWN	Proj. No. 93034-104	Dwg No.
Drawn	J.A.S.	Check	C.L.W.	Date SEPT. 15/95	E-1

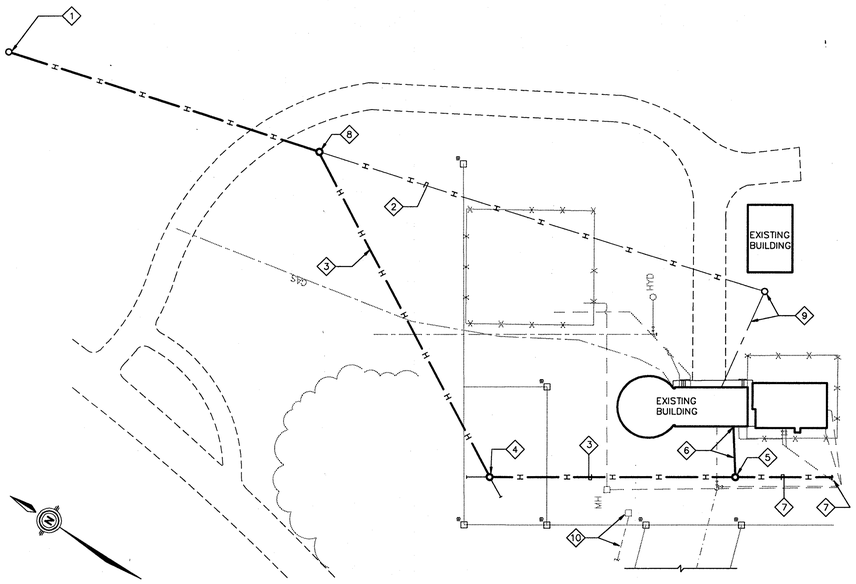

1 / E-1 SEWAGE TREATMENT PLANT, SITE PREPARATION WORK

SCALE 1:500

NOTES

1. EXISTING POLE TO REMAIN. PROVIDE NEW GUYWIRE SUPPORTS AS REQUIRED. PROVIDE NEW PRIMARY LINE AS INDICATED. CO-ORDINATE SPLICE AND CONNECTION REQUIREMENTS WITH LOCAL UTILITY.
2. REUSE EXISTING POLE. CHANGE HARDWIRE FOR VERTICAL CORNER CLASS 5 POLE. GUY WIRES AND SUPPORTS AS REQUIRED.
3. PROVIDE NEW PRIMARY 8.32 kV, 3 PHASE OVERHEAD LINE TO OHEC STANDARDS SECTION 75. PROVIDE ALL GUYWIRES, INSULATORS, ANCHORS, ETC. TO OHEC STANDARDS.
4. PRIMARY, 3 PHASE, 50 kV MAX VERTICAL CORNER CLASS 5 POLE - 11.0M TO OHEC SPECIFICATION 30. PROVIDE GUYWIRE SUPPORTS OR CRIBBING AS REQUIRED.
5. PROVIDE NEW PRIMARY, 3 PHASE 50kV MAX. CLASS 5 POLE C/W RELOCATED TRANSFORMER CLUSTER. REMOVE TRANSFORMERS AND SECONDARY SERVICE AFTER TREATMENT PLANT IS FULLY OPERATIONAL.
6. PROVIDE NEW WEATHERHEAD AT BUILDING AND NEW SECONDARY OVERHEAD LINE FROM RELOCATED TRANSFORMERS. PROVIDE CONNECTION TO EXISTING BUILDING SERVICE. NEW SERVICE CONDUCTOR AMPACITY TO MATCH EXISTING - VERIFY ON SITE. REMOVE AFTER NEW TREATMENT PLANT IS FULLY OPERATIONAL.
7. NEW PRIMARY OVERHEAD LINE TO NEW CONTROL BUILDING. FOR CONTINUATION REFER TO DRAWING E-2.
8. DISCONNECT AND REMOVE EXISTING OVERHEAD LINE, POLES AND ASSOCIATED SUPPORTS, AFTER NEW SERVICE IS INSTALLED.
9. EXISTING POLE WITH UTILITY TRANSFORMER CLUSTER. TRANSFORMERS SHALL BE RELOCATED TO NEW POLE AT REAR OF EXISTING BUILDING. REMOVE POLE AND OVERHEAD LINE TO BUILDING.
10. EXISTING HANDHOLE AND 50mm RIGID PVC CONDUIT, FROM EXISTING SEWAGE PUMPING STATION. REFER TO DRAWING E-2 FOR EXTENSION OF NEW CONDUIT TO NEW CONTROL BUILDING.

DRAWING LIST

E-1	SITE PREPARATION WORK AND LEGEND
E-2	ELECTRICAL SITE SERVICING PLAN
E-3	HEADWORKS
E-4	AERATION TANKS, DIGESTERS, AND CLARIFIERS
E-5	BLOWER AND RAS/WAS ROOMS
E-6	CHEMICAL ROOMS
E-7	CENTRIFUGE BUILDING
E-8	SUBMERSIBLE PUMPING STATION AND PARSHALL FLUME
E-9	CONTROL BUILDING AND DETAILS
E-10	POWER DISTRIBUTION DIAGRAM
E-11	SCHEDULES AND DETAILS
E-12	CONTROL SYSTEM BLOCK DIAGRAM AND INSTRUMENTATION INDEX
E-13	PROCESS AND INSTRUMENTATION DIAGRAM - I
E-14	PROCESS AND INSTRUMENTATION DIAGRAM - II
E-15	CONTROLS - I
E-16	CONTROLS - II
E-17	DETAILS

LEGEND

SYMBOL	DESCRIPTION	SYMBOL	DESCRIPTION	SYMBOL	DESCRIPTION	SYMBOL	DESCRIPTION	SYMBOL	DESCRIPTION
	SURFACE MOUNTED HID LIGHT FIXTURE ON EMERGENCY		MOTOR CONNECTION - 3 PHASE		FIRE ALARM SMOKE DETECTOR		CONTROL/EQUIPMENT PANEL	RTU	REMOTE TERMINAL UNIT
	FLUORESCENT LIGHT FIXTURE ON NORMAL		MOTOR CONNECTION - 1 PHASE		FIRE ALARM HEAT DETECTOR	FIT	FLOW INDICATING TRANSMITTER	MCP	MOTOR CIRCUIT PROTECTOR
	FLUORESCENT LIGHT FIXTURE ON EMERGENCY		PANELBOARD		FIRE ALARM AUDIBLE ALARM	ETM	ELAPSED TIME METER	OL	OVERLOAD RELAY
	EXTERIOR WALL MOUNTED H.I.D. FIXTURE		RADIANT HEATING PANEL		FIRE ALARM PULL STATION	LIT	LEVEL INDICATING TRANSMITTER	TTU	THERMISTOR TRIP UNIT
	EXTERIOR POLE MOUNTED H.I.D. FIXTURE		TELEPHONE OUTLET		FIRE ALARM STROBE LIGHT	1	DENOTES NOTE 1	LL	LOW LEVEL
	RECESSED DOWNLIGHT ON NORMAL		FORCE FLOW HEATER		SECURITY AUDIBLE ALARM	A	FIXTURE TYPE 'A'	HL	HIGH LEVEL
	RECESSED DOWNLIGHT ON EMERGENCY		MANUAL STARTER	K	SECURITY KEY PAD	A	DENOTES ELECTRIC HEATER - TYPE A	HHL	VERY HIGH LEVEL
	EXIT LIGHT C/W DIRECTIONAL ARROWS		MAGNETIC STARTER		MAGNETIC DOOR CONTACT			WP	WP =WEATHERPROOF
	EMERGENCY LTG. BATTERY UNIT C/W HEADS		DISCONNECT SWITCH	IC	INTERCOM HANDSET STATION			E	DENOTES EMERGENCY POWER
	SINGLE/DUAL REMOTE EMERGENCY LTG HEADS	T	THERMOSTAT	M	MOTORIZED DAMPER				
	LIGHT SWITCH - SINGLE OR GANGED		REMOTE ON/OFF STATION	B	DOOR BUZZER PUSHBUTTON				
3	LIGHT SWITCH - 3 DENOTES 3-WAY		POWER TRANSFORMER	B	DOOR BUZZER				
	CLOCK AND RECEPTACLE	G	GENERATOR		TIME CLOCK				
	DUPLEX RECEPTACLE		GROUND	C	CONTACTOR				
	SINGLE RECEPTACLE		3000mm LONG COPPER GROUND ROD	IC	INTERCOM SIGNALLING HORN				
	DIRECT CONNECTION - 3 PHASE	H.O.A.	HAND-OFF-AUTO REMOTE SELECTOR SWITCH						
	DIRECT CONNECTION - 1 PHASE	JB	JUNCTION BOX						
	ENCLOSED BREAKER	PB	PULL BOX						

04/28/1998
WB ID #F:\CAD\1993\93034\ELECT\104\ASBUILT\F:\CAD\1993\93034\ELECT\104\ASBUILT\93034401

NOTES

1. NEW PRIMARY OVERHEAD 8.32 kV, 3 PHASE LINE TO OHEC STANDARDS SECTION 75. PROVIDE ALL GUYWIRES, INSULATORS, ANCHORS, ETC. TO OHEC STANDARDS.
2. NEW PRIMARY, 3 PHASE, 50 kV MAX VERTICAL CORNER CLASS 5 POLE – 11.0M TO OHEC SPECIFICATION 30. PROVIDE GUYWIRE SUPPORTS AS REQUIRED.
3. NEW PRIMARY, 3 PHASE, 50kV MAX ARMLESS CLASS 2 POLE – 15.0M TO OHEC SPECIFICATION 32. (TYPICAL UNLESS OTHERWISE NOTED.)
4. PRIMARY, 3 PHASE 50 kV MAX. DEAD–END CLASS 2 POLE – 15M TO OHEC SPECIFICATION 30. NEW TRANSFORMER CLUSTER BY UTILITY. PROVIDE GROUND RODS AS SHOWN ON DRAWING E–10. COORDINATE ALL WORK WITH UTILITY.
5. PROVIDE OVERHEAD SERVICE TO NEW CONTROL BUILDING AS REQUIRED TO SUIT CONSTRUCTION SCHEDULE. CO–ORDINATE ALL WORK WITH OTHER TRADES.
6. EXISTING HANDHOLE AND 50mm RIGID PVC CONDUIT.
7. PROVIDE 50mm RIGID PVC CONDUIT TO CONTROL BUILDING AS SHOWN. PROVIDE NEW HANDHOLE AS SHOWN. PROVIDE NEW FIBRE OPTIC CABLE IN NEW/EXISTING CONDUIT FROM EXISTING PUMPING STATION TO NEW CONTROL BUILDING. (DISTANCE FROM PUMPING STATION TO CONTROL BUILDING – APPROX. 1100M VERIFY ON SITE)
8. PROVIDE COPPER GROUND RODS IN LOCATIONS AS SHOWN.
9. INTERCONNECT GROUND RODS/GROUND LOOPS WITH #4/0 BARE STRANDED COPPER GROUND WIRE.
10. PROVIDE COPPER GROUND ROD. CONNECT TO LOADING PLATFORM STRUCTURE AT TWO LOCATIONS WITH #4/0 BARE STRANDED COPPER GROUND WIRE.
11. REMOVE ALL EXISTING ELECTRICAL EQUIPMENT, DEVICES, BRANCH WIRING ETC. ASSOCIATED WITH THE DEMOLISHED PLANT.
12. PROVIDE LONG SWEEP BENDS FOR ALL BURIED CONDUITS. (TYPICAL)
13. SUBMERSIBLE PUMPING STATION FOR FOUNDATION DRAINS. PUMP PF–1. PROVIDE 2 X 38mm PVC CONDUITS. ONE FOR POWER, ONE FOR FLOAT CONTROLS.
14. ALL CONDUITS TO BE RIGID PVC UNLESS OTHERWISE NOTED. PROVIDE PULL WIRES IN ALL SPARE CONDUITS. (TYPICAL)
15. CONCRETE ENCASE CONDUITS BELOW ACCESS ROAD.
16. PROVIDE GROUND CONNECTION FROM GROUND RODS TO STRUCTURE, AT FOUR LOCATIONS.
17. INSTALL GROUND LOOP 600mm FROM BUILDING. (TYPICAL)
18. PROVIDE CONNECTION FROM GROUND LOOP TO ALUMINUM CAT–WALKS ON STRUCTURE. PROVIDE TIN PLATED COPPER COMPRESSION CONNECTORS, APPROVED FOR USE WITH ALUMINUM. (TYPICAL)

AS–BUILT

NOTE: REVISED "AS–BUILT" DRAWING. THIS DRAWING HAS BEEN REVISED TO INCORPORATE CHANGES AS INDICATED IN THE CONTRACTOR'S MARKED UP DRAWINGS. CHANGES DONE BY OWNER/OCWA WITHOUT THE CONSULTANT'S INVOLVEMENT ARE NOT INCLUDED ON THE DRAWINGS. CONTRACTOR'S DRAWINGS ARE NOT VERIFIED ON SITE BY ENGINEER. THE ENGINEER DOES NOT TAKE RESPONSIBILITY FOR INFORMATION ON THIS DRAWING THAT IS IN CONFLICT WITH THE EXISTING CONDITON DUE TO INACCURATE OR MISSING INFORMATION ON SOURCE DOCUMENTS PROVIDED.

Wood, Banani & Associates Limited
Consulting Engineers
TEL: (613)591–6050 FAX: 591–9998
EMAIL: wba@webgroup.com
260 Terence Matthews Crescent, Suite 202, Kanata, Ontario, K2M 2C7

No.	Date	Revision
4	JAN. 98	AS–BUILT
3	OCT. 95	ISSUED FOR TENDER
2	SEPT. 15/95	ISSUED FOR REVIEW
1	JAN. 16/95	ISSUED FOR M.O.E.E. APPROVAL

McNEELY ENGINEERING CONSULTANTS LTD.

Owner: TOWNSHIP OF OSNABRUCK

Project: INGLESIDE SEWAGE TREATMENT PLANT
O.C.W.A. SEWAGE WORKS PROJECT No. 40–0797

Title: ELECTRICAL SITE SERVICING PLAN

Design	R.D.	Scale	AS SHOWN	Proj. No.	93034–104	Dwg No.
Drawn	J.A.S.	Check	C.L.W.	Date	SEPT. 15/95	E–2

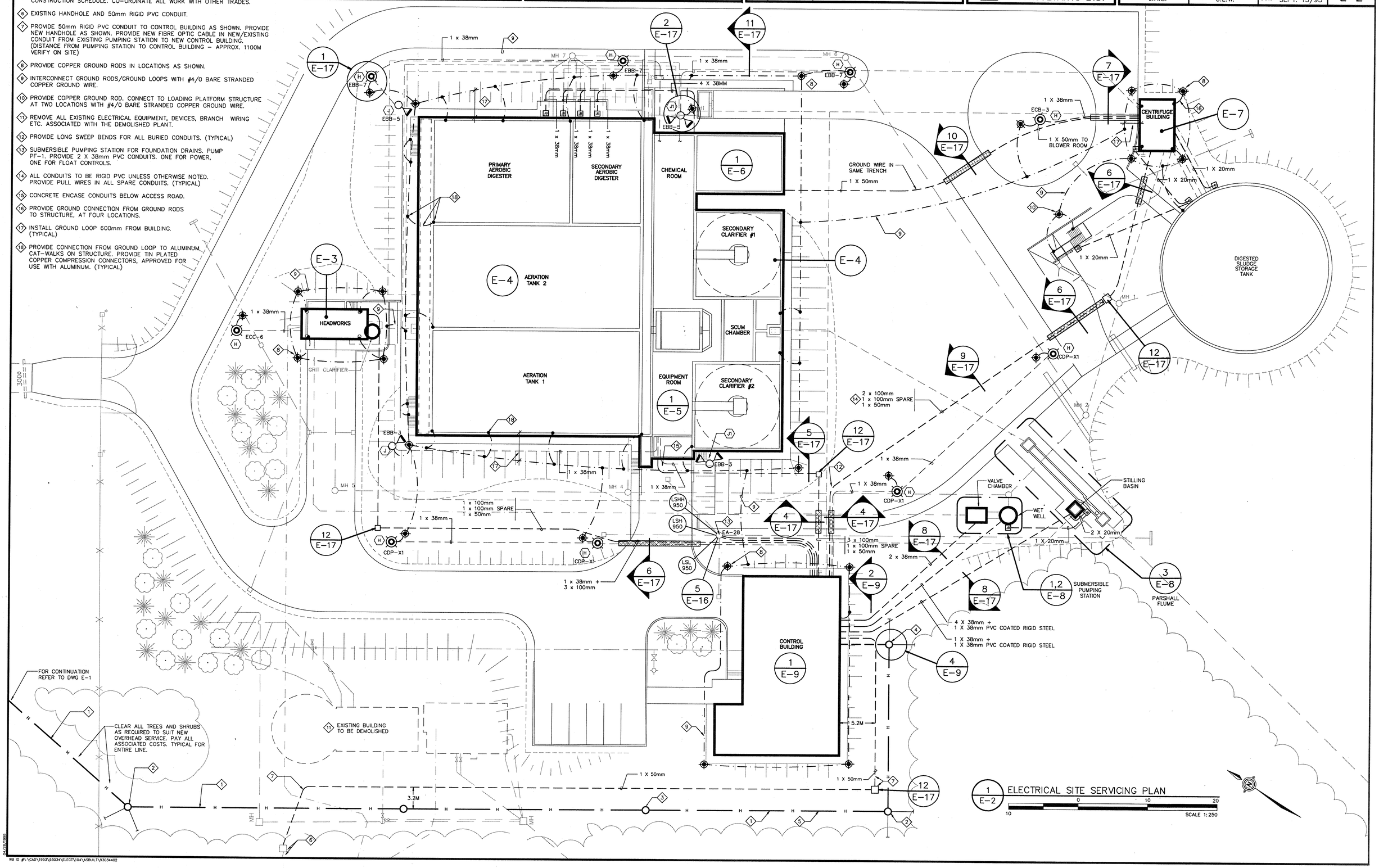

04/23/1998

MS ID #F:\CAD\1993\93034\ELECT\104\ASBUILT\93034402

AS-BUILT

NOTE: REVISED "AS-BUILT" DRAWING. THIS DRAWING HAS BEEN REVISED TO INCORPORATE CHANGES AS INDICATED IN THE CONTRACTOR'S MARKED UP DRAWINGS. CHANGES DONE BY OWNER/OCWA WITHOUT THE CONSULTANT'S INVOLVEMENT ARE NOT INCLUDED ON THE DRAWINGS. CONTRACTOR'S DRAWINGS ARE NOT VERIFIED ON SITE BY ENGINEER. THE ENGINEER DOES NOT TAKE RESPONSIBILITY FOR INFORMATION ON THIS DRAWING THAT IS IN CONFLICT WITH THE EXISTING CONDITON DUE TO INACCURATE OR MISSING INFORMATION ON SOURCE DOCUMENTS PROVIDED.

Wood, Banani & Associates Limited
Consulting Engineers
TEL: (613)591-6050 FAX: 591-9998
EMAIL: wbg@wbgroup.com
260 Terence Matthews Crescent, Suite 202, Kanata, Ontario, K2M 2C7

No.	Date	Revision
4	JAN. 98	AS-BUILT
3	OCT. 95	ISSUED FOR TENDER
2	SEPT. 15/95	ISSUED FOR REVIEW
1	JAN. 16/95	ISSUED FOR M.O.E.E. APPROVAL

McNEELY ENGINEERING CONSULTANTS LTD.

Owner: TOWNSHIP OF OSNABRUCK

Project: INGLESIDE SEWAGE TREATMENT PLANT
O.C.W.A. SEWAGE WORKS PROJECT No. 40-0797

Title: HEADWORKS

Design	R.D.	Scale	AS SHOWN	Proj. No. 93034-104	Dwg No.
Drawn	J.A.S.	Check	C.L.W.	Date SEPT. 15/95	E-3

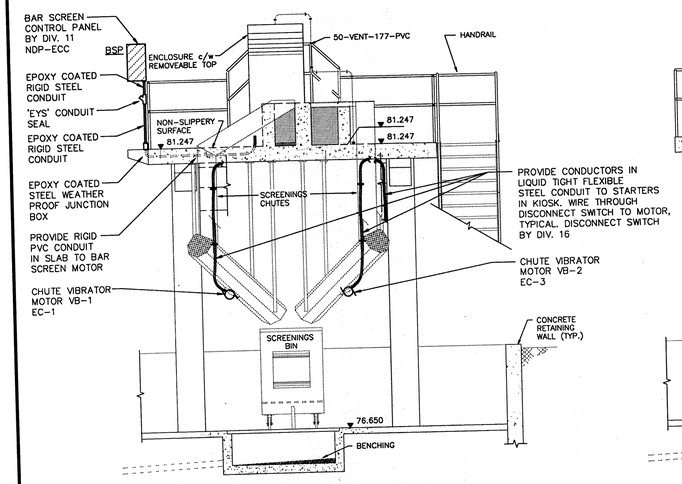

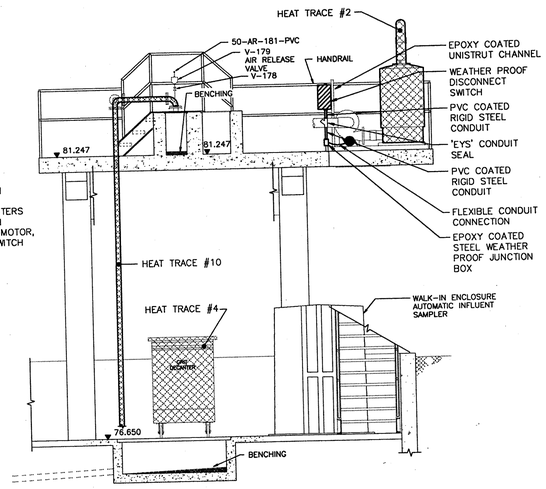

NOTE:
REFER TO PANEL SCHEDULE BP-ED
FOR HEAT TRACING BRNACH CIRCUIT NUMBERS
PROVIDE ALL PIPE/EQUIPMENT HEAT TRACING AS SHOWN ON DIV. 11 AND DIV. 15 DRAWINGS.

1A / E-3 SECTION ELEVATIONS – HEADWORKS
SCALE 1:50

1B / E-3 SECTION ELEVATIONS – HEADWORKS
SCALE 1:50

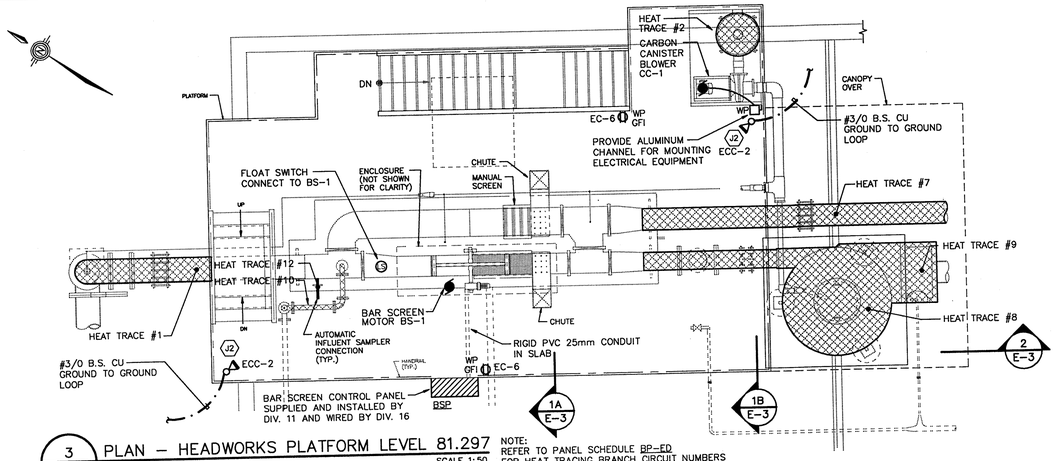

3 / E-3 PLAN – HEADWORKS PLATFORM LEVEL 81.297
SCALE 1:50

NOTE: REFER TO PANEL SCHEDULE BP-ED FOR HEAT TRACING BRANCH CIRCUIT NUMBERS

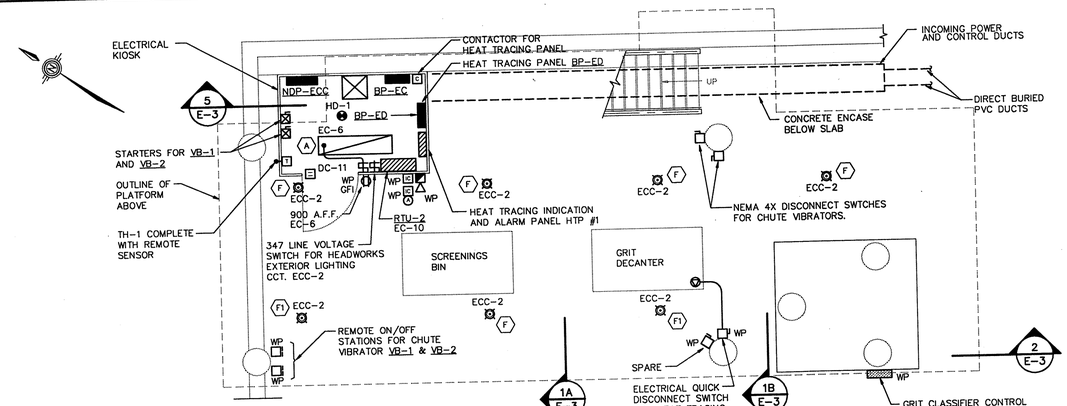

4 / E-3 PLAN – HEADWORKS GROUND LEVEL 76.650
SCALE 1:50

NOTE: REFER TO PANEL SCHEDULE BP-ED FOR HEAT TRACING BRANCH CIRCUIT NUMBERS

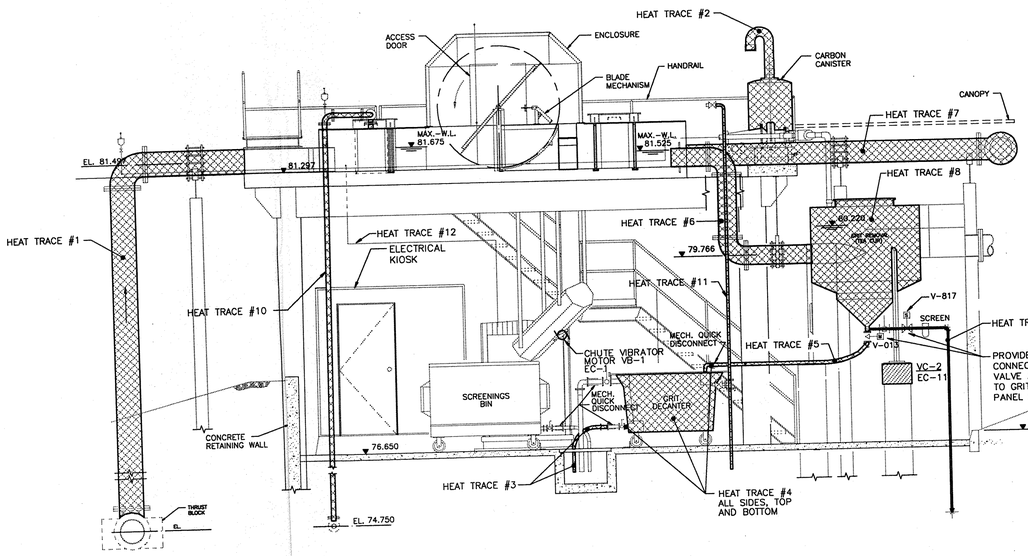

2 / E-3 WEST ELEVATION/SECTION – HEADWORKS
SCALE 1:50

NOTE: REFER TO PANEL SCHEDULE BP-ED FOR HEAT TRACING BRANCH CIRCUIT NUMBERS

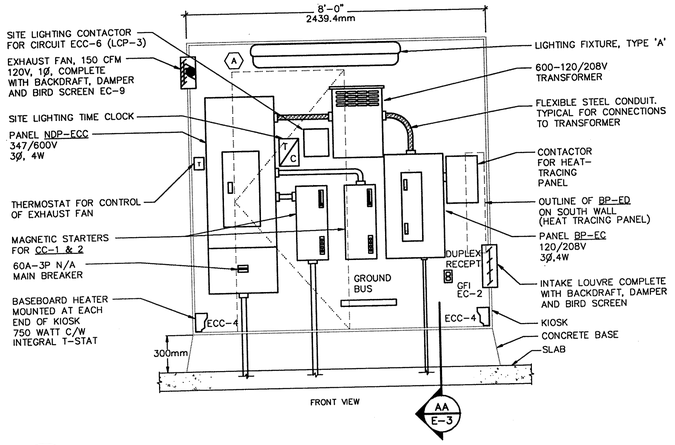

5 / E-3 ELEVATION HEADWORKS – ELECTRICAL KIOSK
SCALE 1:25

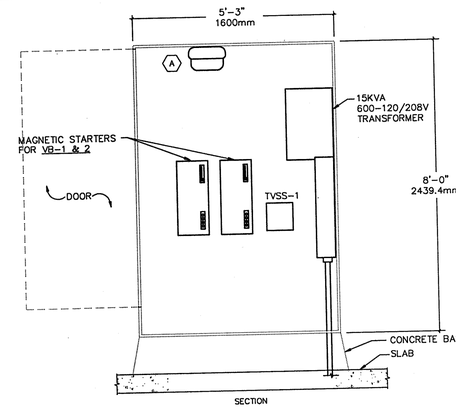

AA / E-3 SECTION
1:25

NOTES:

1. FOR DETAILS OF HEADWORKS REFER TO DRAWING E-3.
2. FOR DETAILS OF EQUIPMENT ROOM REFER TO DRAWING E-5.
3. FOR DETAILS OF CHEMICAL ROOM REFER TO DRAWING E-6.
4. PROVIDE HEAT TRACING OVER EXPOSED PIPING AS SHOWN.
5. CONTROL PANEL SUPPLIED AND INSTALLED BY DIV. 11, WIRED BY DIV. 16. (MCC-1).
6. BRANCH WIRING AND EQUIPMENT CONDUITS ETC. NOT TO PENETRATE TANK WALLS BETWEEN TANKS AND EQUIPMENT BUILDIN, (TYPICAL).
7. EACH INDIVIDUAL EXTERIOR WEATHER PROOF RECEPTACLE TO BE GROUND FAULT INTERRUPTER TYPE, (ONE GROUND FAULT INTERRUPTER PER CIRCUIT NOT ACCEPTABLE).
8. CONNECT TO VC-1
9. REFER TO SPECIFICATION SECTION 15952 FOR SEQUENCE OF OPERATION. CO-ORDINATE ALL WORK WITH DIV. 15.. CONTROL BRANCH WIRING AND CONTROLS BY DIV. 15.
10. PROVIDE 120V BRANCH WIRING CONNECTIONS TO MOTORIZED DAMPERS. CO-ORDINATE ALL WORK WITH DIV. 15.

AS-BUILT

NOTE: REVISED "AS-BUILT" DRAWING. THIS DRAWING HAS BEEN REVISED TO INCORPORATE CHANGES AS INDICATED IN THE CONTRACTOR'S MARKED UP DRAWINGS. CHANGES DONE BY OWNER/OCWA WITHOUT THE CONSULTANT'S INVOLVEMENT ARE NOT INCLUDED ON THE DRAWINGS. CONTRACTOR'S DRAWINGS ARE NOT VERIFIED ON SITE BY ENGINEER. THE ENGINEER DOES NOT TAKE RESPONSIBILITY FOR INFORMATION ON THIS DRAWING THAT IS IN CONFLICT WITH THE EXISTING CONDITON DUE TO INACCURATE OR MISSING INFORMATION ON SOURCE DOCUMENTS PROVIDED.

Wood, Banani & Associates Limited
Consulting Engineers
(613)591-6050 FAX 591-9998
135 Michael Cowpland Drive, Suite 200, Kanata, Ontario, K2M 2E9

No.	Date	Revision
4	JAN. 98	AS-BUILT
3	OCT. 95	ISSUED FOR TENDER
2	SEPT. 15/95	ISSUED FOR REVIEW
1	JAN. 16/95	ISSUED FOR M.O.E.E. APPROVAL

McNEELY ENGINEERING CONSULTANTS LTD.

Owner: TOWNSHIP OF OSNABRUCK
Project: INGLESIDE SEWAGE TREATMENT PLANT
O.C.W.A. SEWAGE WORKS PROJECT No. 40-0797
Title: AERATION TANKS, DIGESTERS AND CLARIFIERS

Design	R.D.	Scale	AS SHOWN	Proj. No.	93034-104	Dwg No.
Drawn	R.D.	Check	C.L.W.	Date	SEPT. 15/95	E-4

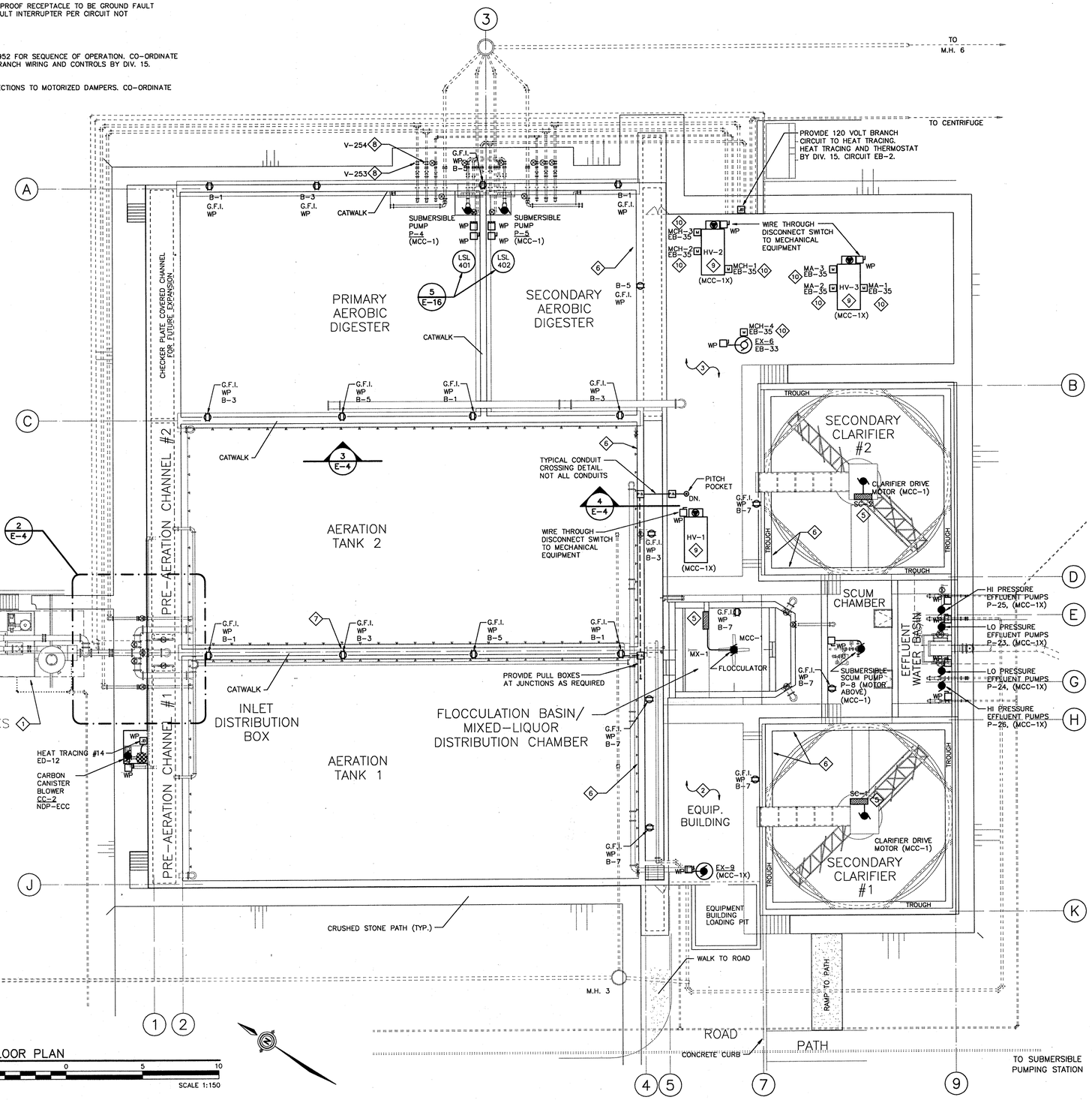

1 E-4 FLOOR PLAN
SCALE 1:150

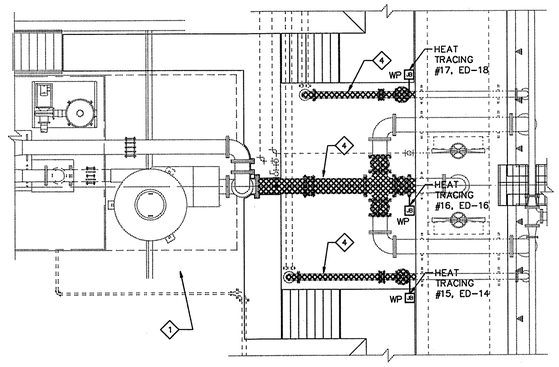

2 E-4 HEAT TRACING DETAIL #1
SCALE 1:75

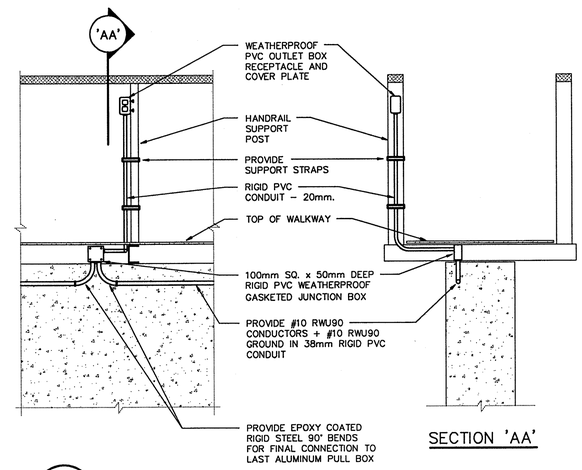

3 E-4 RECEPTACLE MOUNTING DETAIL
SCALE 1:20

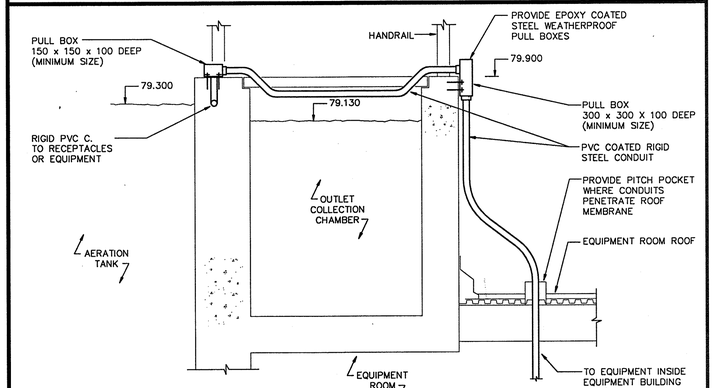

4 E-4 CONDUIT-ROOF PENETRATION DETAIL
SCALE 1:25

WS ID #F:\CAD\1993\93034\ELECT\104\ASBUILT\F:\CAD\1993\93034\ELECT\104\ASBUILT\93034404
04/28/1998

NOTES

1. THERMOSTAT, CONTROLS AND BRANCH WIRING BY DIV. 16. REFER TO SPECIFICATION 15952 FOR SEQUENCE OF OPERATION. CO-ORDINATE ALL WORK WITH DIV. 15.
2. REFER TO SPECIFICATION SECTION 15952 FOR SEQUENCE OF OPERATION. CO-ORDINATE ALL WORK WITH DIV. 15. CONTROL BRANCH WIRING AND CONTROLS BY DIV 15.
3. PROVIDE 120V BRANCH WIRING CONNECTIONS TO MOTORIZED DAMPERS. CO-ORDINATE ALL WORK WITH DIV. 15.
4. BLOWER FAN CONTROL DAMPERS, SWITCH AND THERMOSTAT. PROVIDE 120V CONNECTIONS (FROM BLOWER STARTERS) AND INTERLOCK AS REQUIRED TO SUIT SEQUENCE OF OPERATION. REFER TO SPECIFICATION SECTION 15952 FOR SEQUENCE OF OPERATION. CO-ORDINATE ALL WORK WITH DIV. 15.
5. PROVIDE 610mm SQ. SUMP/PULL PIT FOR FEEDERS TO MCC SECTIONS. PROVIDE ALUMINUM HINGED COVER PLATE. PROVIDE BELL ENDS ON ALL CONDUITS. BOND COVERPLATE TO GROUND BUS.

AS-BUILT

NOTE: REVISED "AS-BUILT" DRAWING. THIS DRAWING HAS BEEN REVISED TO INCORPORATE CHANGES AS INDICATED IN THE CONTRACTOR'S MARKED UP DRAWINGS. CHANGES DONE BY OWNER/OCWA WITHOUT THE CONSULTANT'S INVOLVEMENT ARE NOT INCLUDED ON THE DRAWINGS. CONTRACTOR'S DRAWINGS ARE NOT VERIFIED ON SITE BY ENGINEER. THE ENGINEER DOES NOT TAKE RESPONSIBILITY FOR INFORMATION ON THIS DRAWING THAT IS IN CONFLICT WITH THE EXISTING CONDITON DUE TO INACCURATE OR MISSING INFORMATION ON SOURCE DOCUMENTS PROVIDED.

Wood, Banani & Associates Limited
Consulting Engineers
TEL: (613)591-6050 FAX: 591-9998
EMAIL: wbg@wbgroup.com
260 Terence Matthews Crescent, Suite 202, Kanata, Ontario, K2M 2C7

No.	Date	Revision
4	JAN. 98	AS-BUILT
3	OCT. 95	ISSUED FOR TENDER
2	SEPT. 15/95	ISSUED FOR REVIEW
1	JAN. 16/95	ISSUED FOR M.O.E.E. APPROVAL

McNEELY ENGINEERING CONSULTANTS LTD.

Owner: TOWNSHIP OF OSNABRUCK

Project: INGLESIDE SEWAGE TREATMENT PLANT
O.C.W.A. SEWAGE WORKS PROJECT No. 40-0797

Title: BLOWER & RAS/WAS ROOMS

Design	R.D.	Scale	AS SHOWN	Proj. No. 93034-104	Dwg No. E-5
Drawn	K.J.P.	Check	C.L.W.	Date SEPT. 15/95	

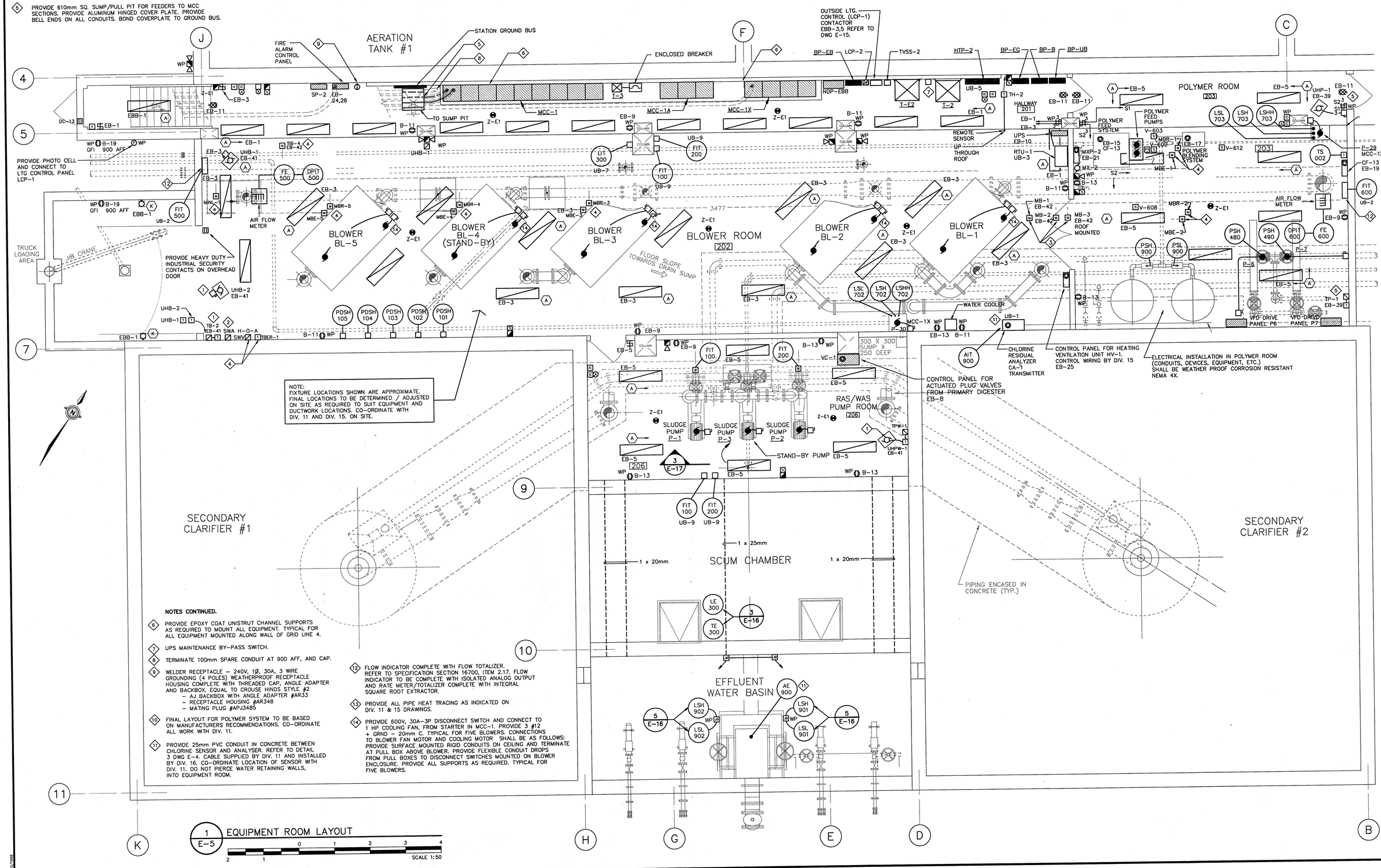

NOTES CONTINUED.

6. PROVIDE EPOXY COAT UNISTRUT CHANNEL SUPPORTS AS REQUIRED TO MOUNT ALL EQUIPMENT. TYPICAL FOR ALL EQUIPMENT MOUNTED ALONG WALL OF GRID LINE 4.
7. UPS MAINTENANCE BY-PASS SWITCH.
8. TERMINATE 100mm SPARE CONDUIT AT 900 AFF, AND CAP.
9. WELDER RECEPTACLE – 240V, 1Ø, 30A, 3 WIRE GROUNDING (4 POLES) WEATHERPROOF RECEPTACLE HOUSING COMPLETE WITH THREADED CAP, ANGLE ADAPTER AND BACKBOX. EQUAL TO CROUSE HINDS STYLE #2
   - AJ BACKBOX WITH ANGLE ADAPTER #AR33
   - RECEPTACLE HOUSING #AR348
   - MATING PLUG #APJ3485
10. FINAL LAYOUT FOR POLYMER SYSTEM TO BE BASED ON MANUFACTURERS RECOMMENDATIONS. CO-ORDINATE ALL WORK WITH DIV. 11.
11. PROVIDE 25mm PVC CONDUIT IN CONCRETE BETWEEN CHLORINE SENSOR AND ANALYSER. REFER TO DETAIL 3 DWG E-4. CABLE SUPPLIED BY DIV. 11 AND INSTALLED BY DIV. 16. CO-ORDINATE LOCATION OF SENSOR WITH DIV. 11. DO NOT PIERCE WATER RETAINING WALLS, INTO EQUIPMENT ROOM.
12. FLOW INDICATOR COMPLETE WITH FLOW TOTALIZER. REFER TO SPECIFICATION SECTION 16700, ITEM 2.17. FLOW INDICATOR TO BE COMPLETE WITH ISOLATED ANALOG OUTPUT AND RATE METER/TOTALIZER COMPLETE WITH INTEGRAL SQUARE ROOT EXTRACTOR.
13. PROVIDE ALL PIPE HEAT TRACING AS INDICATED ON DIV. 11 & 15 DRAWINGS.
14. PROVIDE 600V, 30A-3P DISCONNECT SWITCH AND CONNECT TO 1 HP COOLING FAN, FROM STARTER IN MCC-1. PROVIDE 3 #12 + GRND – 20mm C. TYPICAL FOR FIVE BLOWERS. CONNECTIONS TO BLOWER FAN MOTOR AND COOLING MOTOR SHALL BE AS FOLLOWS: PROVIDE SURFACE MOUNTED RIGID CONDUITS ON CEILING AND TERMINATE AT PULL BOX ABOVE BLOWER. PROVIDE FLEXIBLE CONDUIT DROPS FROM PULL BOXES TO DISCONNECT SWITCHES MOUNTED ON BLOWER ENCLOSURE. PROVIDE ALL SUPPORTS AS REQUIRED. TYPICAL FOR FIVE BLOWERS.

1 / E-5 EQUIPMENT ROOM LAYOUT
SCALE 1:50

02/10/1995

WB ID #:\CAD\1993\93034\ELECT\04\ASBUILT\93034405

NOTES

1. CONTROL PANEL FOR HEATING/VENTILATION UNIT, 24 VOLT. ALL CONTROL WIRING BY DIV. 15.
2. PROVIDE CONTACTOR AND STARTER FOR EXHAUST FAN EX-6. CONTROLS BY DIV. 15
3. REFER TO SPECIFICATION SECTION 15952 FOR SEQUENCE OF OPERATION. CO-ORDINATE ALL WORK WITH DIV. 15. CONTROL BRANCH WIRING AND CONTROLS BY DIV 15.
4. PROVIDE 120V BRANCH WIRING CONNECTIONS TO MOTORIZED DAMPERS. CO-ORDINATE ALL WORK WITH DIV. 15.
5. THERMOSTAT, CONTROLS AND BRANCH WIRING BY DIV. 16. REFER TO SPECIFICATION 15952 FOR SEQUENCE OF OPERATION. CO-ORDINATE ALL WORK WITH DIV. 15.
6. ELECTRICAL EQUIPMENT IN THIS AREA (CONDUITS, DEVICES, EQUIPMENT, ETC) SHALL BE WEATHER PROOF CORROSION RESISTANT NEMA 4X.

AS-BUILT

NOTE: REVISED "AS-BUILT" DRAWING. THIS DRAWING HAS BEEN REVISED TO INCORPORATE CHANGES AS INDICATED IN THE CONTRACTOR'S MARKED UP DRAWINGS. CHANGES DONE BY OWNER/OCWA WITHOUT THE CONSULTANT'S INVOLVEMENT ARE NOT INCLUDED ON THE DRAWINGS. CONTRACTOR'S DRAWINGS ARE NOT VERIFIED ON SITE BY ENGINEER. THE ENGINEER DOES NOT TAKE RESPONSIBILITY FOR INFORMATION ON THIS DRAWING THAT IS IN CONFLICT WITH THE EXISTING CONDITON DUE TO INACCURATE OR MISSING INFORMATION ON SOURCE DOCUMENTS PROVIDED.

Wood, Banani & Associates Limited
Consulting Engineers
(613)591-6050 FAX 591-9998
135 Michael Cowpland Drive, Suite 200, Kanata, Ontario, K2M 2E9

No.	Date	Revision
4	JAN. 98	AS-BUILT
3	OCT. 95	ISSUED FOR TENDER
2	SEPT. 15/95	ISSUED FOR REVIEW
1	JAN. 16/95	ISSUED FOR M.O.E.E. APPROVAL

McNEELY ENGINEERING CONSULTANTS LTD.

Owner: TOWNSHIP OF OSNABRUCK

Project: INGLESIDE SEWAGE TREATMENT PLANT
O.C.W.A. SEWAGE WORKS PROJECT No. 40-0797

Title: CHEMICAL ROOMS

Design	R.D.	Scale	AS SHOWN	Proj. No.	93034-104	Dwg No.
Drawn	K.J.P.	Check	C.L.W.	Date	SEPT. 15/95	E-6

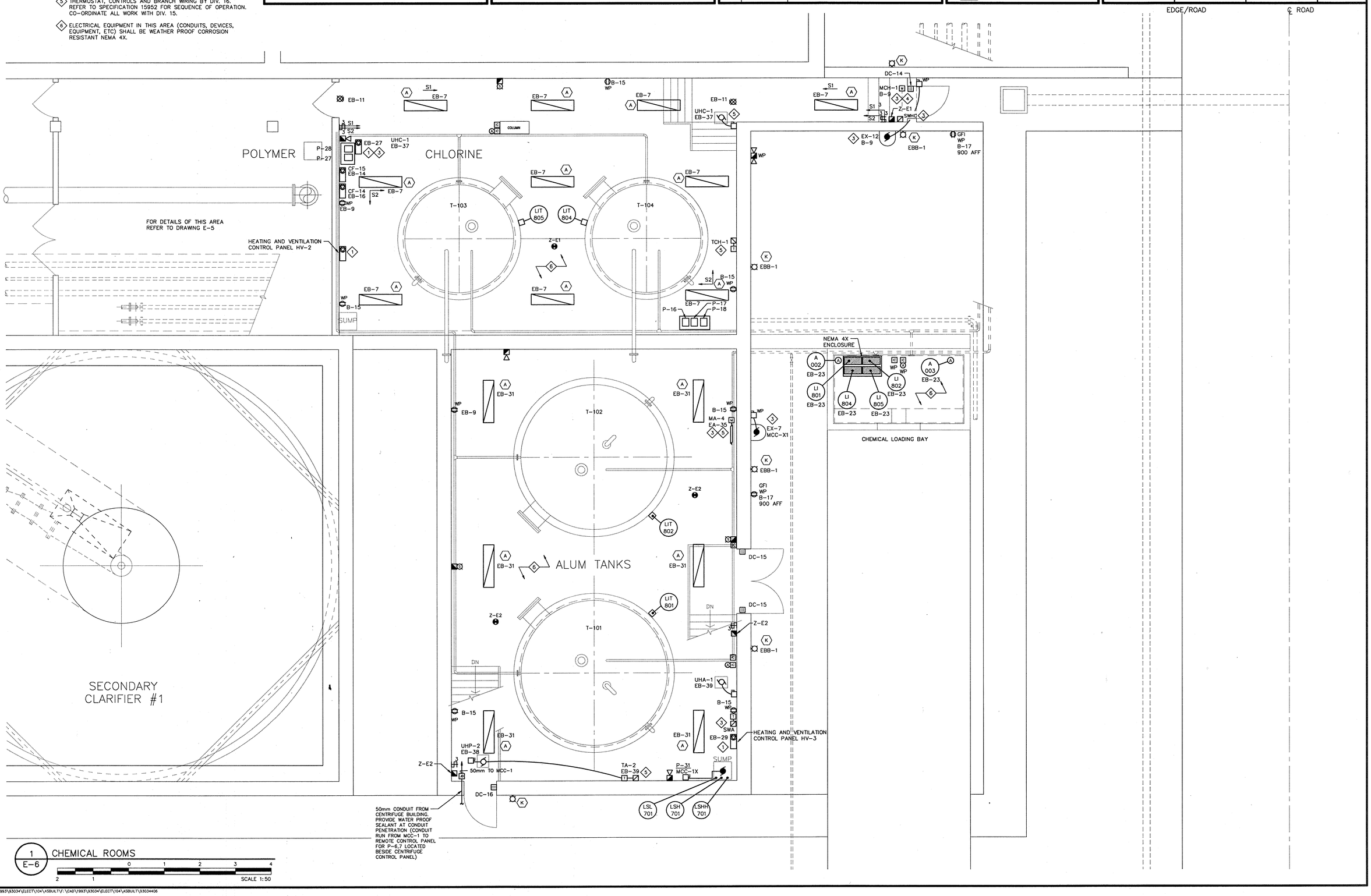

1 / E-6 CHEMICAL ROOMS

SCALE 1:50

04/28/1998

WB ID #F:\CAD\1993\93034\ELECT\104\ASBUILT\F:\CAD\1993\93034\ELECT\104\ASBUILT\93034406

AS-BUILT

NOTE: REVISED "AS-BUILT" DRAWING. THIS DRAWING HAS BEEN REVISED TO INCORPORATE CHANGES AS INDICATED IN THE CONTRACTOR'S MARKED UP DRAWINGS. CHANGES DONE BY OWNER/OCWA WITHOUT THE CONSULTANT'S INVOLVEMENT ARE NOT INCLUDED ON THE DRAWINGS. CONTRACTOR'S DRAWINGS ARE NOT VERIFIED ON SITE BY ENGINEER. THE ENGINEER DOES NOT TAKE RESPONSIBILITY FOR INFORMATION ON THIS DRAWING THAT IS IN CONFLICT WITH THE EXISTING CONDITON DUE TO INACCURATE OR MISSING INFORMATION ON SOURCE DOCUMENTS PROVIDED.

Wood, Banani & Associates Limited
Consulting Engineers
(613)591-6050 FAX 591-9998
135 Michael Cowpland Drive, Suite 200, Kanata, Ontario, K2M 2E9

No.	Date	Revision
4	JAN. 98	AS-BUILT
3	OCT. 95	ISSUED FOR TENDER
2	SEPT. 15/95	ISSUED FOR REVIEW
1	JAN. 16/95	ISSUED FOR M.O.E.E. APPROVAL

McNEELY ENGINEERING CONSULTANTS LTD.

Owner	TOWNSHIP OF OSNABRUCK				
Project	INGLESIDE SEWAGE TREATMENT PLANT O.C.W.A. SEWAGE WORKS PROJECT No. 40-0797				
Title	CENTRIFUGE BUILDING				
Design R.D.		Scale AS SHOWN	Proj. No. 93034-104	Dwg No. E-7	
Drown J.A.S.		Check C.L.W.	Date SEPT. 15/95		

NOTES:

1. PROVIDE DUAL SET-POINT THERMOSTAT. REFER TO SPECIFICATION SECTION 16870. REFER TO SPECIFICATION SECTION 15952 FOR SEQUENCE OF OPERATION.
2. REFER TO SPECIFICATION SECTION 15952 FOR SEQUENCE OF OPERATION. CO-ORDINATE ALL WORK WITH DIVISION 15. BRANCH WIRING AND CONTROLS BY DIVISION 16.
3. 120VAC, 1 PH POWER SUPPLY TO REMOTE TRANSMITTER SHALL BE FROM UPS LOCATED IN RTU. PROVIDE CIRCUIT BREAKER IN RTU TO SUBFEED THESE INSTRUMENTS.
4. ELECTRICAL INSTALLATION IN THIS AREA SHALL BE WEATHER-PROOF - PVC CONDUIT, NEMA 12 MCC AND PANELBOARDS AND CONTROL DEVICES, NEMA 4X RECEPTACLES, SWITCHES, LIGHTS ETC. ENCLOSED NEMA 4 TRANSFORMER.

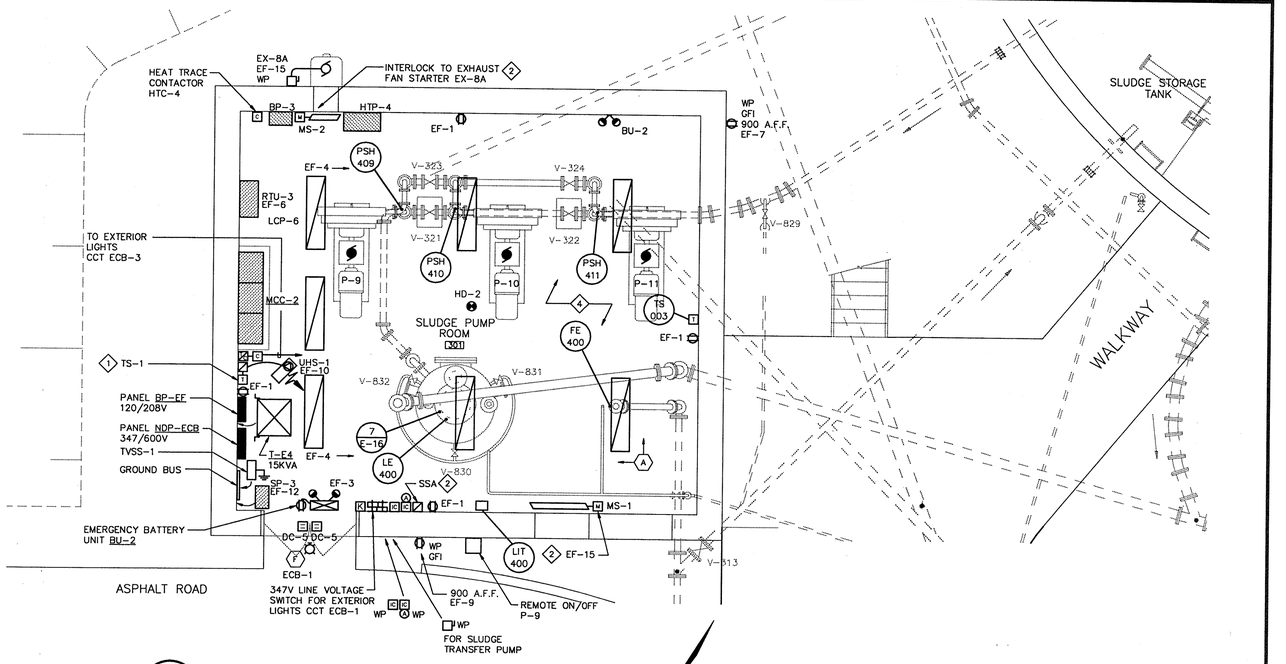

1 / E-7 FLOOR PLAN - GROUND LEVEL

SCALE 1:50

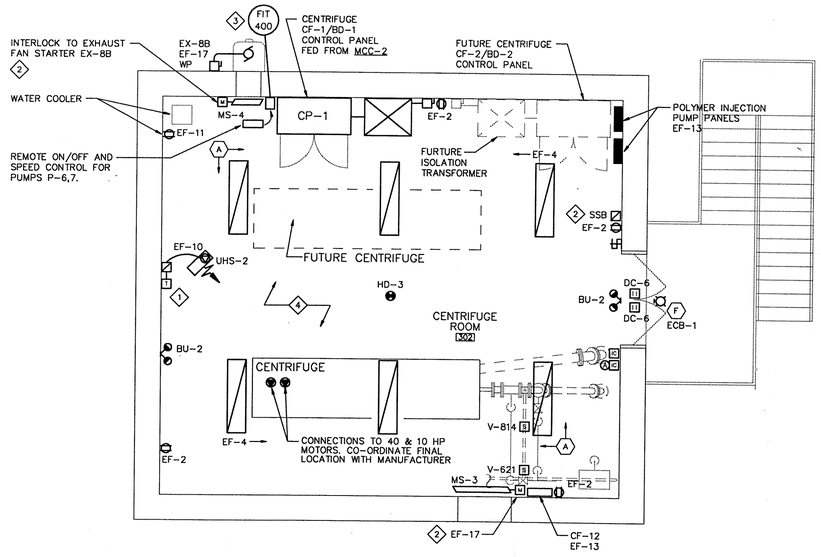

2 / E-7 FLOOR PLAN - SECOND LEVEL

SCALE 1:50

04/28/1998

MS ID #F:\CAD\1993\93034\ELECT\104\ASBUILT\F:\CAD\1993\93034\ELECT\104\ASBUILT\93034407

AS-BUILT

NOTE: REVISED "AS-BUILT" DRAWING. THIS DRAWING HAS BEEN REVISED TO INCORPORATE CHANGES AS INDICATED IN THE CONTRACTOR'S MARKED UP DRAWINGS. CHANGES DONE BY OWNER/OCWA WITHOUT THE CONSULTANT'S INVOLVEMENT ARE NOT INCLUDED ON THE DRAWINGS. CONTRACTOR'S DRAWINGS ARE NOT VERIFIED ON SITE BY ENGINEER. THE ENGINEER DOES NOT TAKE RESPONSIBILITY FOR INFORMATION ON THIS DRAWING THAT IS IN CONFLICT WITH THE EXISTING CONDITION DUE TO INACCURATE OR MISSING INFORMATION ON SOURCE DOCUMENTS PROVIDED.

Wood, Banani & Associates Limited
Consulting Engineers
(613)591-6050 FAX 591-9998
135 Michael Cowpland Drive, Suite 200, Kanata, Ontario, K2M 2E9

No.	Date	Revision
4	JAN. 98	AS-BUILT
3	OCT. 95	ISSUED FOR TENDER
2	SEPT. 15/95	ISSUED FOR REVIEW
1	JAN. 16/95	ISSUED FOR M.O.E.E. APPROVAL

McNEELY ENGINEERING CONSULTANTS LTD.

Owner: TOWNSHIP OF OSNABRUCK

Project: INGLESIDE SEWAGE TREATMENT PLANT
O.C.W.A. SEWAGE WORKS PROJECT No. 40-0797

Title: SUBMERSIBLE PUMPING STATION AND PARSHALL FLUME

Design	R.D./G.M.	Scale	AS SHOWN	Proj. No.	93034-104	Dwg No.
Drawn	J.A.S.	Check	C.L.W.	Date	SEPT. 15/95	E-8

NOTE: PROVIDE ALL PIPE HEAT TRACING AS INDICATED ON DIVISION 11 & 15 DRAWINGS.

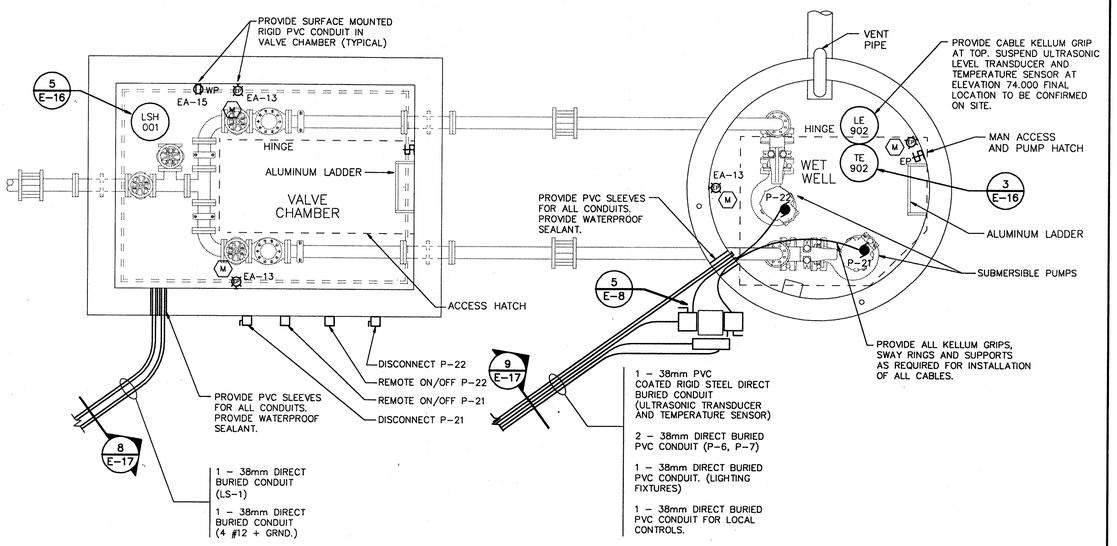

1 E-8 SUBMERSIBLE PUMPING STATION - PLAN

SCALE 1:25

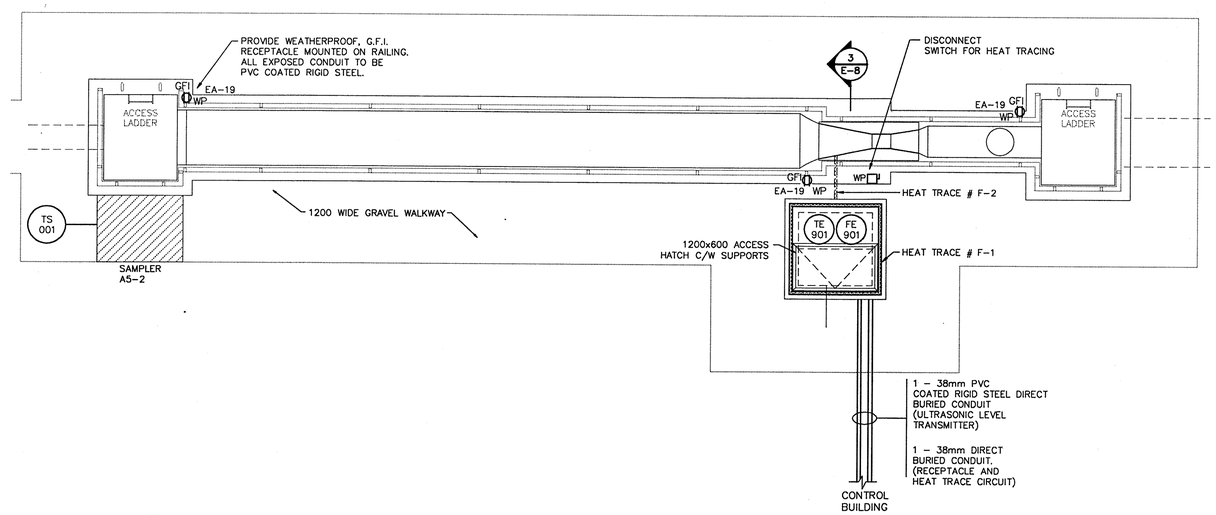

2 E-8 PARSHALL FLUME - PLAN

SCALE 1:50

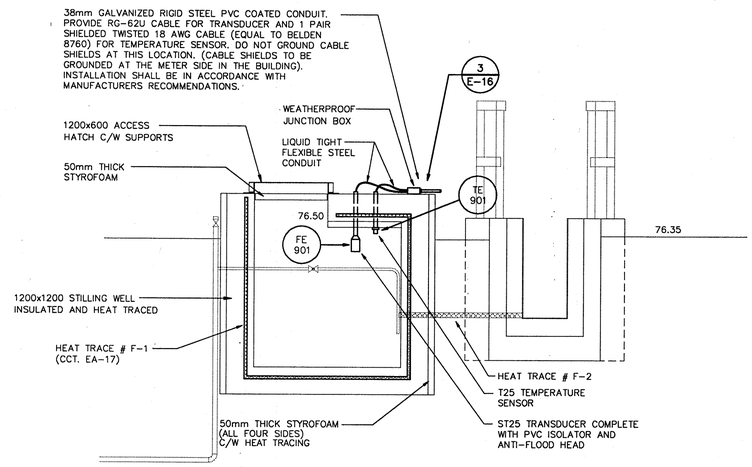

3 E-8 PARSHALL FLUME - SECTION

SCALE 1:25

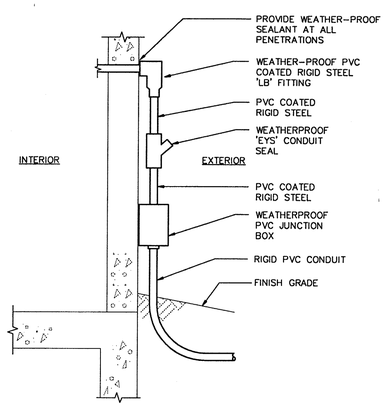

4 E-8 EYS CONDUIT SEAL DETAIL

1:25

04/28/1995

W9 ID #F:\CAD\1993\93034\ELECT\104\ASBUILT\F:\CAD\1993\93034\ELECT\104\ASBUILT\93034108

AS-BUILT

NOTE: REVISED "AS-BUILT" DRAWING. THIS DRAWING HAS BEEN REVISED TO INCORPORATE CHANGES AS INDICATED IN THE CONTRACTOR'S MARKED UP DRAWINGS. CHANGES DONE BY OWNER/OCWA WITHOUT THE CONSULTANT'S INVOLVEMENT ARE NOT INCLUDED ON THE DRAWINGS. CONTRACTOR'S DRAWINGS ARE NOT VERIFIED ON SITE BY ENGINEER. THE ENGINEER DOES NOT TAKE RESPONSIBILITY FOR INFORMATION ON THIS DRAWING THAT IS IN CONFLICT WITH THE EXISTING CONDITON DUE TO INACCURATE OR MISSING INFORMATION ON SOURCE DOCUMENTS PROVIDED.

Wood, Banani & Associates Limited
Consulting Engineers
(613)591-6050 FAX 591-9998
135 Michael Cowpland Drive, Suite 200, Kanata, Ontario, K2M 2E9

No.	Date	Revision
4	JAN. 98	AS BUILT
3	OCT. 95	ISSUED FOR TENDER
2	SEPT. 15/95	ISSUED FOR REVIEW
1	JAN. 16/95	ISSUED FOR M.O.E.E. APPROVAL

McNEELY ENGINEERING CONSULTANTS LTD.

Owner: TOWNSHIP OF OSNABRUCK

Project: INGLESIDE SEWAGE TREATMENT PLANT
O.C.W.A. SEWAGE WORKS PROJECT No. 40-0797

Title: CONTROL BUILDING AND DETAILS

Design	R.D.	Scale	AS SHOWN	Proj. No. 93034-104	Dwg No.
Drawn	J.A.S.	Check	C.L.W.	Date SEPT. 15/95	E-9

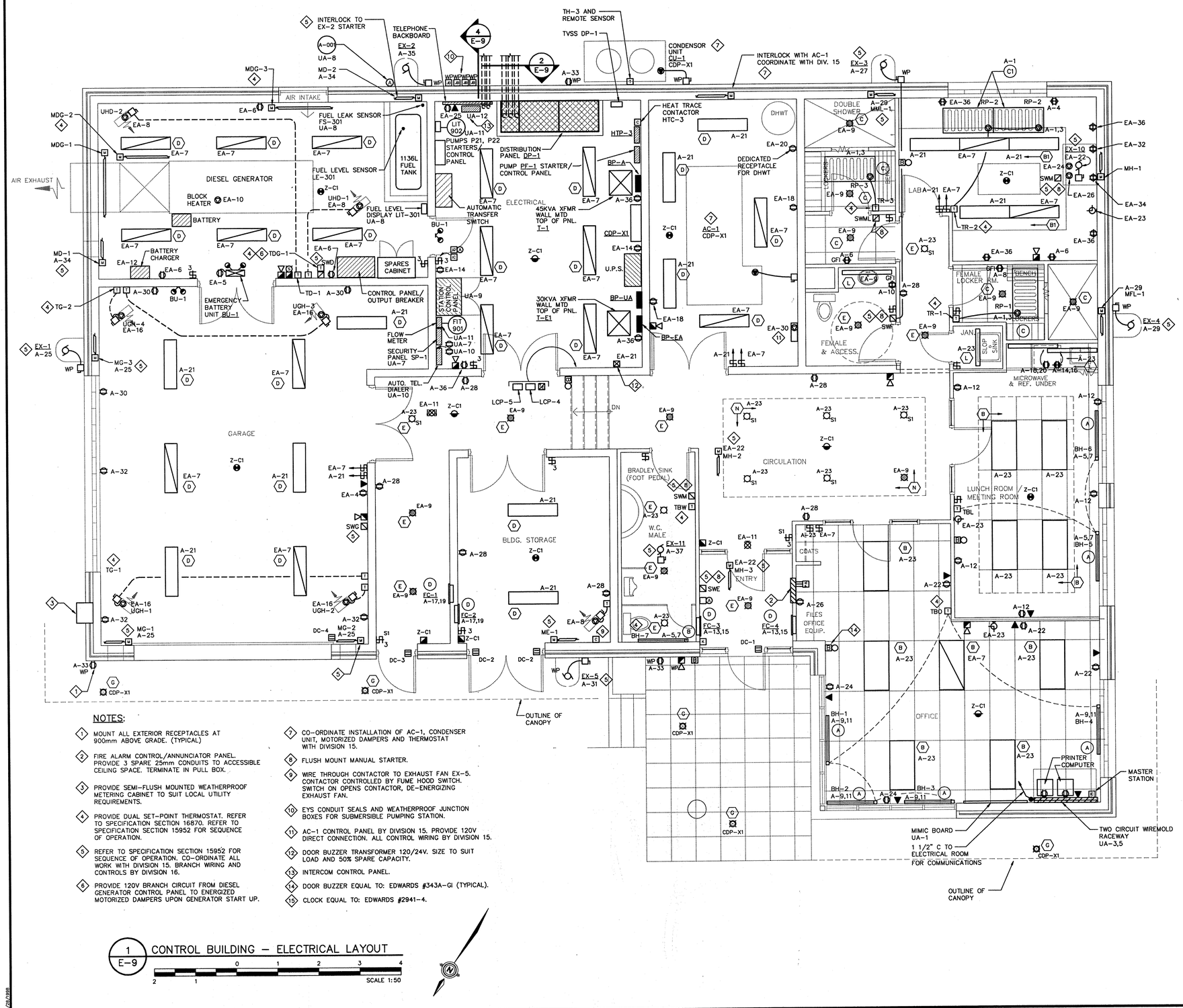

NOTES:

1. MOUNT ALL EXTERIOR RECEPTACLES AT 900mm ABOVE GRADE. (TYPICAL)
2. FIRE ALARM CONTROL/ANNUNCIATOR PANEL. PROVIDE 3 SPARE 25mm CONDUITS TO ACCESSIBLE CEILING SPACE. TERMINATE IN PULL BOX.
3. PROVIDE SEMI-FLUSH MOUNTED WEATHERPROOF METERING CABINET TO SUIT LOCAL UTILITY REQUIREMENTS.
4. PROVIDE DUAL SET-POINT THERMOSTAT. REFER TO SPECIFICATION SECTION 16870. REFER TO SPECIFICATION SECTION 15952 FOR SEQUENCE OF OPERATION.
5. REFER TO SPECIFICATION SECTION 15952 FOR SEQUENCE OF OPERATION. CO-ORDINATE ALL WORK WITH DIVISION 15. BRANCH WIRING AND CONTROLS BY DIVISION 16.
6. PROVIDE 120V BRANCH CIRCUIT FROM DIESEL GENERATOR CONTROL PANEL TO ENERGIZED MOTORIZED DAMPERS UPON GENERATOR START UP.
7. CO-ORDINATE INSTALLATION OF AC-1, CONDENSER UNIT, MOTORIZED DAMPERS AND THERMOSTAT WITH DIVISION 15.
8. FLUSH MOUNT MANUAL STARTER.
9. WIRE THROUGH CONTACTOR TO EXHAUST FAN EX-5. CONTACTOR CONTROLLED BY FUME HOOD SWITCH. SWITCH ON OPENS CONTACTOR, DE-ENERGIZING EXHAUST FAN.
10. EYS CONDUIT SEALS AND WEATHERPROOF JUNCTION BOXES FOR SUBMERSIBLE PUMPING STATION.
11. AC-1 CONTROL PANEL BY DIVISION 15. PROVIDE 120V DIRECT CONNECTION. ALL CONTROL WIRING BY DIVISION 15.
12. DOOR BUZZER TRANSFORMER 120/24V. SIZE TO SUIT LOAD AND 50% SPARE CAPACITY.
13. INTERCOM CONTROL PANEL.
14. DOOR BUZZER EQUAL TO: EDWARDS #343A-GI (TYPICAL).
15. CLOCK EQUAL TO: EDWARDS #2941-4.

1/E-9 CONTROL BUILDING – ELECTRICAL LAYOUT
SCALE 1:50

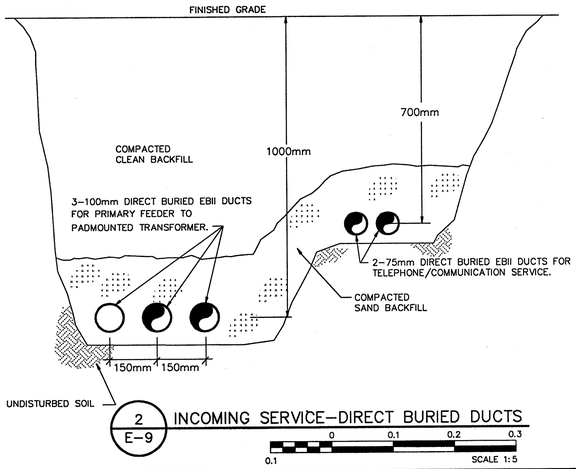

2/E-9 INCOMING SERVICE–DIRECT BURIED DUCTS
SCALE 1:5

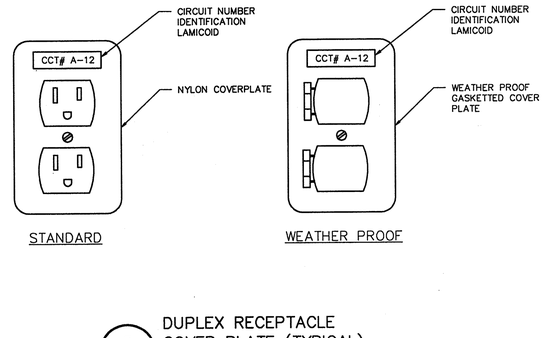

3/E-9 DUPLEX RECEPTACLE COVER PLATE (TYPICAL)
N.T.S.

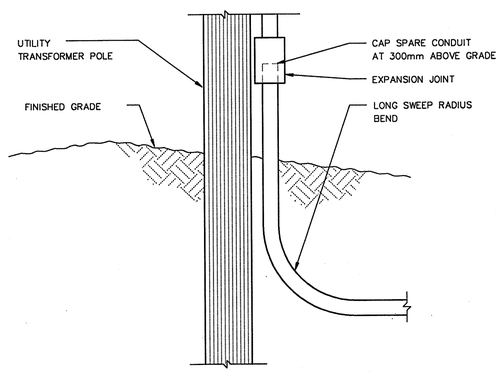

4/E-9 INCOMING SERVICE DETAIL
N.T.S.

24/JUL/1995
W3 ID #F:\CAD\1993\93034\ELECT\104\ASBUILT\F:\CAD\1993\93034\ELECT\104\ASBUILT\93034409

AS-BUILT

NOTE: REVISED "AS-BUILT" DRAWING. THIS DRAWING HAS BEEN REVISED TO INCORPORATE CHANGES AS INDICATED IN THE CONTRACTOR'S MARKED UP DRAWINGS. CHANGES DONE BY OWNER/OCWA WITHOUT THE CONSULTANT'S INVOLVEMENT ARE NOT INCLUDED ON THE DRAWINGS. CONTRACTOR'S DRAWINGS ARE NOT VERIFIED ON SITE BY ENGINEER. THE ENGINEER DOES NOT TAKE RESPONSIBILITY FOR INFORMATION ON THIS DRAWING THAT IS IN CONFLICT WITH THE EXISTING CONDITON DUE TO INACCURATE OR MISSING INFORMATION ON SOURCE DOCUMENTS PROVIDED.

Wood, Banani & Associates Limited
Consulting Engineers
TEL: (613)591-6050 FAX: 591-9998
EMAIL: wbg@wbgroup.com
260 Terence Matthews Crescent, Suite 202, Kanata, Ontario, K2M 2C7

No.	Date	Revision
4	JAN. 98	AS-BUILT
3	OCT. 95	ISSUED FOR TENDER
2	SEPT. 15/95	ISSUED FOR REVIEW
1	JAN. 16/95	ISSUED FOR M.O.E.E. APPROVAL

McNEELY ENGINEERING CONSULTANTS LTD.

Owner: TOWNSHIP OF OSNABRUCK

Project: INGLESIDE SEWAGE TREATMENT PLANT
O.C.W.A. SEWAGE WORKS PROJECT No. 40-0797

Title: POWER DISTRIBUTION DIAGRAM

Design	R.D./G.M.	Scale	AS SHOWN	Proj. No.	93034-104	Dwg No.
Drawn	J.A.S.	Check	C.L.W.	Date	SEPT. 15/95	E-10

CONTROL BUILDING

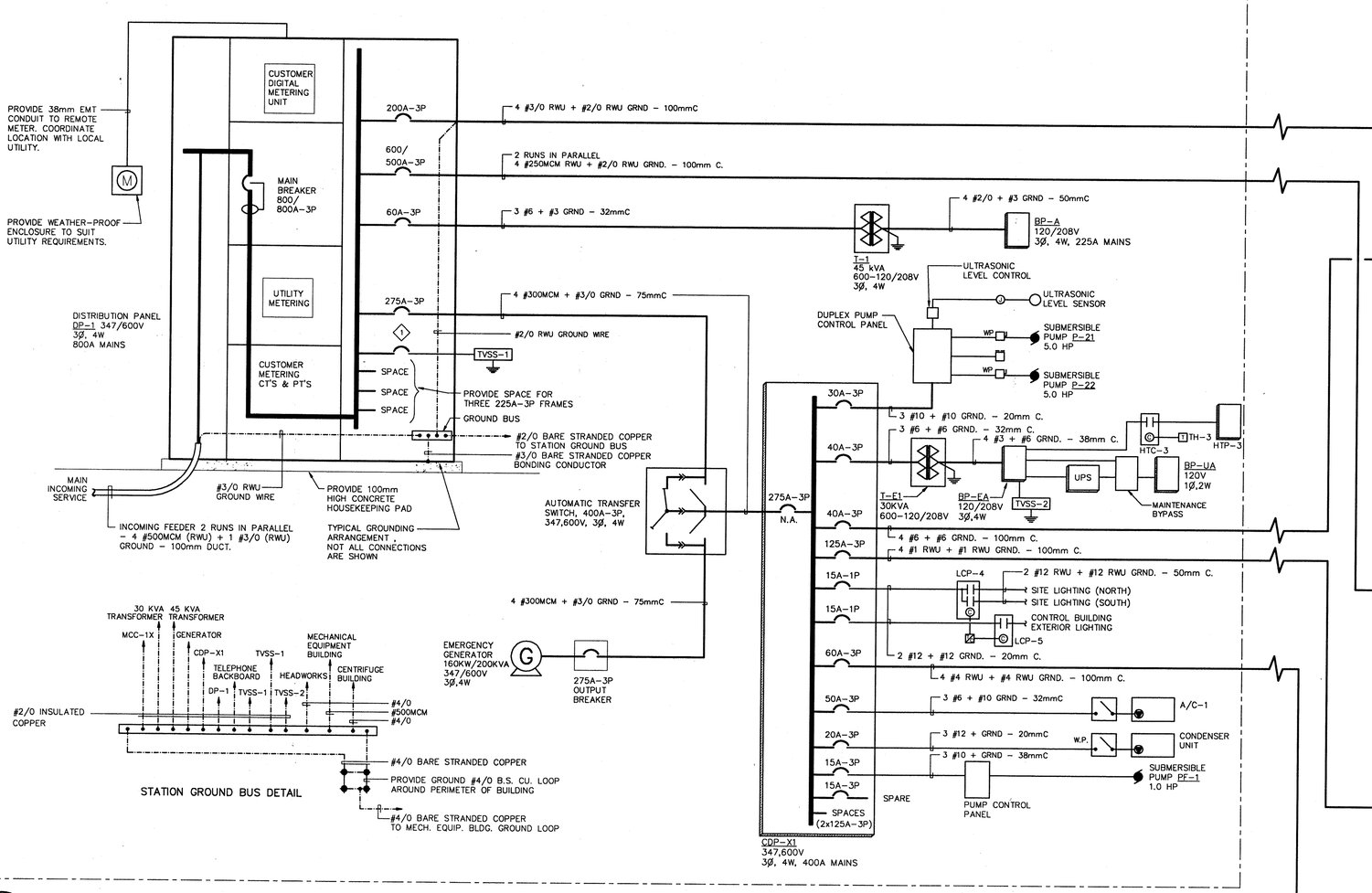

1 / E-10 POWER DISTRIBUTION DIAGRAM N.T.S.

CENTRIFUGE BUILDING

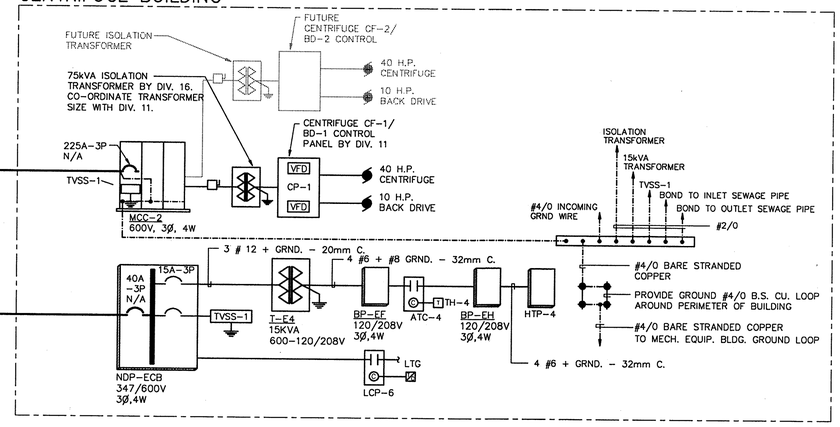

BLOWER AND RAS/WAS ROOMS

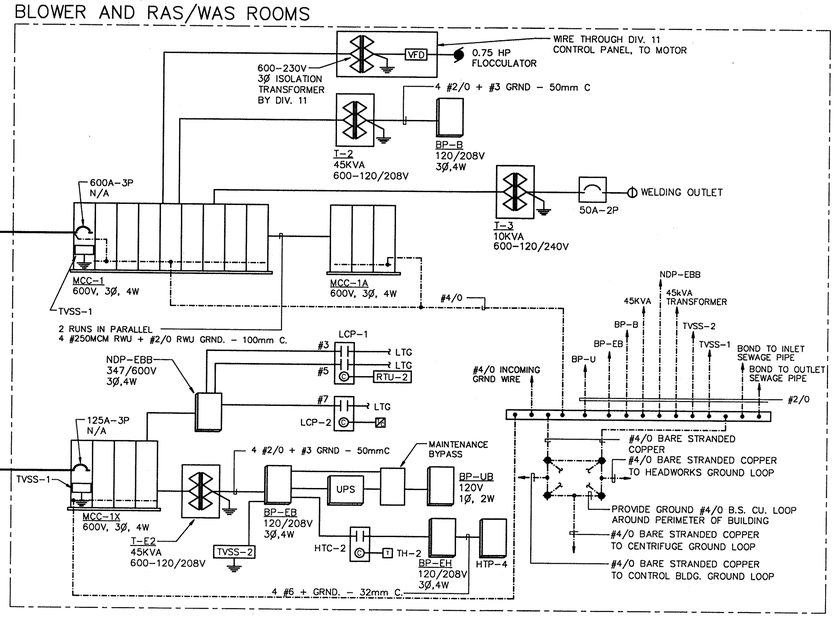

HEADWORKS

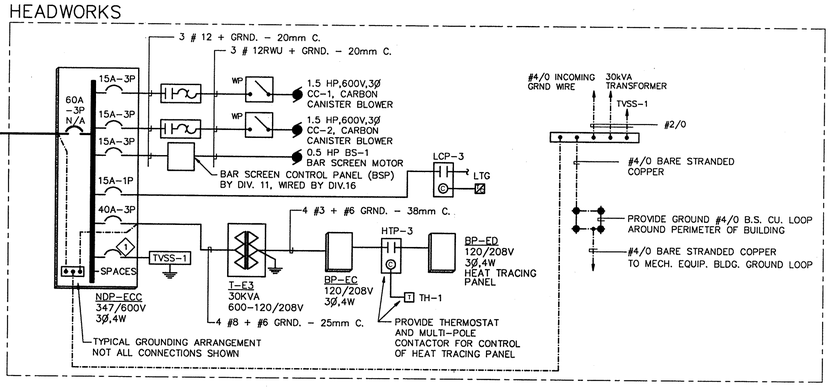

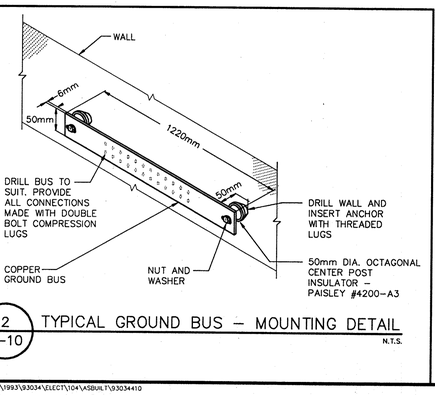

2 / E-10 TYPICAL GROUND BUS - MOUNTING DETAIL N.T.S.

GENERAL NOTES:

1. CONNECT GROUND CONDUCTOR TO GROUND BUS CONTINUOUS RUN.
2. PROVIDE FOUR 20mm, 3M LONG COPPER CLAD GROUND RODS (ONE AT EACH CORNER FO BUILDING). INTERCONNNECT RODS WITH 4/0 COPPER CONDUCTOR BURIED 600mm BELOW GROUND.
3. ALL 600 VOLT BREAKERS TO HAVE MINIMUM 25,000 AMP INTERUPTING RATING OR HIGHER AS SPECIFIED.
4. ALL 208, 120 VOLT BREAKERS TO HAVE MINIMUM 10,000AMP INTERUPTING RATING OR HIGHER AS SPECIFIED.

NOTES:

1. PROVIDE BREAKER SIZE AS RECOMMENDED BY TVSS UNIT MANUFACTURER.
2. PROVIDE 1 #2/0 BARE STRANDED COPPER GROUND WIRE TO STATION GROUND BUS.
3. PROVIDE BREAKER ONLY (FOR FUTURE EQUIPMENT).
4. BOND TO EACH CORNER OF BUILDING USING #2/0 BARE STRANDED COPPER.
5. BOND TO ALL METAL MEMBERS OF STRUCTURE INCLUDING HANDRAILS, CATWALKS, LADDERS,ETC., USING #2/0 BARE STRANDED COPPER.
6. REFER TO PANEL SCHEDULE FOR ADDITIONAL INFORMATION.

07/01/1998

WB ID #: \CAD\1993\93034\ELECT\104\ASBUILT\93034410

NOTES

1. REDUCED VOLTAGE AUTO TRANSFORMER CLOSED TRANSITION
2. VERIFY ACTUAL F.L.A. ON SITE PRIOR TO SELECTING OVERLOAD PROTECTION.
3. CONNECTIONS TO MOTORS SHALL INCLUDE POWER AND TEMPERATURE SENSING.
4. CONTROL PANEL, STARTERS AND CONTROLS SUPPLIED AND INSTALLED BY DIV. 11, WIRED BY DIV. 16. FEEDER BREAKER AND ASSOCIATED WIRING BY DIV. 16
5. MOTOR STARTERS AND CONTROL PANEL SUPPLIED, INSTALLED AND WIRED BY DIV. 16. REFER TO DRAWING E-15 AND 16 FOR SEQUENCE OF OPERATION.
6. PROVIDE RWU90 CONDUCTORS FOR BRANCH WIRING TO ALL EXTERIOR MOUNTED EQUIPMENT/MOTORS ETC.
7. REFER TO SPECIFICATION SECTION 15952 FOR SEQUENCE OF OPERATION. CO-ORDINATE ALL WORK WITH DIV. 15 PROVIDE INTERLOCKS AND 120V BRANCH WIRING TO SWITCHES, THERMOSTATS AND MOTORIZED DAMPERS ETC. CO-ORDINATE ALL CONTROLS WITH DIV. 15. FEEDER BREAKER, AND DISCONNECT SWITCH PROVIDED BY DIV. 16, THERMOSTATS PROVIDED BY DIV. 15, UNLESS OTHERWISE NOTED.
8. PROVIDE 4 POSITION SELECTOR SWITCH WITH HAND-OFF-AUTO-REMOTE
9. PROVIDE ISOLATION TRANSFORMER AT BOTTOM OF STARTER CUBICLE. SIZE TO SUIT EQUIPMENT.
10. PROVIDE INTERLOCK WITH THE FOLLOWING BLOWER MOUNTED DEVICES: HIGH TEMP. CUTOUT; PRESSURE SWITCH; HIGH BEAR TEMP SENSOR. PROVIDE ALARM INDICATION LIGHT ON STARTER COVER FOR EACH ALARM. ALL ABOVE ALARMS SHALL SHUTDOWN BLOWERS.
11. STARTER AND MCC ENCLOSURE TYPES SHALL BE INDICATED ON THE DRAWINGS. TYPICAL.

Wood, Banani & Associates Limited
Consulting Engineers
(613)591-6050 FAX 591-9998
135 Michael Cowpland Drive, Suite 200, Kanata, Ontario, K2M 2E9

No.	Date	Revision
4	JAN. 98	AS-BUILT
3	OCT. 95	ISSUED FOR TENDER
2	SEPT. 15/95	ISSUED FOR REVIEW
1	JAN. 16/95	ISSUED FOR M.O.E.E. APPROVAL

McNEELY ENGINEERING CONSULTANTS LTD.

Owner: TOWNSHIP OF OSNABRUCK
Project: INGLESIDE SEWAGE TREATMENT PLANT
O.C.W.A. SEWAGE WORKS PROJECT No. 40-0797
Title: SCHEDULES AND DETAILS

Design	R.D.	Scale	AS SHOWN	Proj. No. 93034-104	Dwg No.
Drawn	J.A.S.	Check	C.L.W.	Date SEPT. 15/95	E-11

MOTOR CONTROL SCHEDULE

MOTOR/ EQUIP. NO.	SERVICE DESCRIPTION	MOTOR/ EQUIP. LOCATION	SOURCE	MOTOR CHARACTERISTICS H.P.	F.L.A. ◇2	VOLT	ø	BREAKER SIZE	FEEDER ◇6
CC-1	CARBON CANISTER BLOWER	HEADWORKS	NDP-ECC	1.5	2.1	600	3	15A-3P	3 #12 + GRND. - 20mmC.
CC-2	CARBON CANISTER BLOWER	HEADWORKS	NDP-ECC	1.5	2.1	600	3	15A-3P	3 #12 + GRND. - 20mmC.
VB-1	BAR SCREEN CHUTE VIBRATOR	HEADWORKS	BP-EC	.33	7.2	120	1	15A-1P	2 #12 + GRND. - 20mmC.
VB-2	BAR SCREEN CHUTE VIBRATOR	HEADWORKS	BP-EC	.33	7.2	120	1	15A-1P	2 #12 + GRND. - 20mmC.
BS-1	BAR SCREEN MOTOR	HEADWORKS	NDP-ECC	0.5	0.8	600	3	15A-3P	3 #12 + GRND. - 25mmC.
P-4	SUBMERSIBLE PUMP	DIGESTER TANK	MCC-1	3	3.9	600	3	15A-3P	3 #12 + GRND. - 20mmC.
P-5	SUBMERSIBLE PUMP	DIGESTER TANK	MCC-1	3	3.9	600	3	15A-3P	3 #12 + GRND. - 20mmC.
BL-1	BLOWER	BLOWER ROOM	MCC-1	75	77	600	3	150A-3P	3 #1/0 + GRND. - 50mmC.
BL-2	BLOWER	BLOWER ROOM	MCC-1	75	77	600	3	150A-3P	3 #1/0 + GRND. - 50mmC.
BL-3	BLOWER	BLOWER ROOM	MCC-1	75	77	600	3	150A-3P	3 #1/0 + GRND. - 50mmC.
BL-4	BLOWER - STANDBY	BLOWER ROOM	MCC-1	75	77	600	3	150A-3P	3 #1/0 + GRND. - 50mmC.
BL-5	BLOWER	BLOWER ROOM	MCC-1	75	77	600	3	150A-3P	3 #1/0 + GRND. - 50mmC.
P-6	DIGESTED FEED PUMP	POLYMER ROOM	MCC-1	1.5	2.1	600	3	15A-3P	3 #12 + GRND. - 20mmC.
P-7	DIGESTED FEED PUMP	POLYMER ROOM	MCC-1	1.5	2.1	600	3	15A-3P	3 #12 + GRND. - 20mmC.
P-1	SLUDGE PUMP - RAS/WAS	RAS/WAS ROOM	MCC-1A	20	22	600	3	50A-3P	3 #6 + GRND. - 32mmC.
P-2	SLUDGE PUMP - RAS/WAS	RAS/WAS ROOM	MCC-1A	20	22	600	3	50A-3P	3 #6 + GRND. - 32mmC.
P-3	SLUDGE PUMP - RAS/WAS - STANDBY	RAS/WAS ROOM	MCC-1A	20	22	600	3	50A-3P	3 #6 + GRND. - 32mmC.
P-30	SUMP PUMP	BLOWER ROOM	MCC-1X	1	1.4	600	3	15A-3P	3 #12 + GRND. - 20mmC.
HV-1	MAKE-UP AIR UNIT	EQUIP. BLDG. ROOF	MCC-1X	7.5	8.0	600	3	20A-3P	3 #12 + GRND. - 20mmC.
EX-9	EXHAUST FAN	BLOWER ROOM	MCC-1X	1.5	2.1	600	3	15A-3P	3 #12 + GRND. - 20mmC.
T-2	45kVA TRANSFORMER	BLOWER ROOM	MCC-1	-	43.3	600	3	60A-3P	3 #6 + GRND. - 38mmC.
T-3	10kVA TRANSFORMER	BLOWER ROOM	MCC-1	-	10	600	2	15A-2P	2 #12 + GRND. - 20mmC.
NDP-EBB	PANELBOARD	BLOWER ROOM	MCC-1X	-	50	600	3	70A-3P	4 #4 + GRND. - 25mmC.
P-31	SUMP PUMP	ALUM ROOM	MCC-1X	1	1.4	600	3	15A-3P	3 #12 + GRND. - 20mmC.
P-23	LO PRESSURE EFFLUENT PUMP	EFF. WATER BASIN	MCC-1X	3	6.1	600	3	20A-3P	3 #12 + GRND. - 20mmC.
P-24	LO PRESSURE EFFLUENT PUMP	EFF. WATER BASIN	MCC-1X	3	6.1	600	3	20A-3P	3 #12 + GRND. - 20mmC.
P-25	HI PRESSURE EFFLUENT PUMP	EFF. WATER BASIN	MCC-1X	5	6.1	600	3	20A-3P	3 #12 + GRND. - 20mmC.
P-26	HI PRESSURE EFFLUENT PUMP	EFF. WATER BASIN	MCC-1X	5	6.1	600	3	20A-3P	3 #12 + GRND. - 20mmC.
P-8	SCUM PUMP	SCUM CHAMBER	MCC-1	7.5	9	600	3	20A-3P	3 #12 + GRND. - 20mmC.
MX-1	FLOCCULATOR	FLOCCULATION BASIN	MCC-1	.75	1.1	600	3	15A-3P	3 #12 + GRND. - 20mmC.
HV-2	MAKE-UP AIR UNIT	EQUIP. BLDG. ROOF	MCC-1X	1	1.3	600	3	15A-3P	3 #12 + GRND. - 20mmC.
HV-3	MAKE-UP AIR UNIT	EQUIP. BLDG. ROOF	MCC-1X	2	2.2	600	3	15A-3P	3 #12 + GRND. - 20mmC.
EX-6	EXHAUST FAN	CHEMICAL ROOM	EBP-EB	.33	7.2	120	1	15A-1P	2 #12 + GRND. - 20mmC.
EX-7	EXHAUST FAN	CHEMICAL ROOM	MCC-1X	1	1.1	600	3	15A-3P	3 #12 + GRND. - 20mmC.
EX-12	EXHAUST FAN	CHEMICAL ROOM	BP-B	.16	4.4	120	1	15A-1P	2 #12 + GRND. - 20mmC.
CF-1/ BD-1	CENTRIFUGE CONTROL PANEL	CENTRIFUGE BLDG.	MCC-2	40/10	41/11	600	3	150A-3P	3 #1/0 + GRND. - 50mmC.
CF-2/ BD-2	CENTRIFUGE CONTROL PANEL (FUTURE)	CENTRIFUGE BLDG.	MCC-2	40/10	41/11	600	3	150A-3P	
P-9	PD PUMP	CENTRIFUGE BLDG.	MCC-2	10	11	600	3	25A-3P	3 #10 + GRND. - 20mmC.
P-10	PD PUMP - STANDBY	CENTRIFUGE BLDG.	MCC-2	10	11	600	3	25A-3P	3 #10 + GRND. - 20mmC.
P-11	PD PUMP	CENTRIFUGE BLDG.	MCC-2	10	11	600	3	25A-3P	3 #10 + GRND. - 20mmC.
EX-8A	EXHAUST FAN	CENTRIFUGE BLDG.	BP-EF	.16	4.4	120	1	15A-1P	2 #12 + GRND. - 20mmC.
EX-8B	EXHAUST FAN	CENTRIFUGE BLDG.	BP-EF	.16	4.4	120	1	15A-1P	2 #12 + GRND. - 20mmC.
AC-1	HVAC UNIT	CONTROL BLDG. 7.5+5HP	CDP-1X		14.4	600	3	30A-3P	3 #6 + GRND. - 32mmC.
CU-1	CONDENSER	CONTROL BLDG.	CDP-1X	7.5	28.9	600	3	20A-3P	3 #12 + GRND. - 20mmC.
EX-1	EXHAUST FAN - GARAGE	CONTROL BLDG.	BP-A	.25	5.8	120	1	15A-1P	2 #12 + GRND. - 20mmC.
EX-2	EXHAUST FAN - DIESEL GEN. ROOM	CONTROL BLDG.	BP-A	.25	5.8	120	1	15A-1P	2 #12 + GRND. - 20mmC.
EX-3	EXHAUST FAN - MALE LOCKER ROOM	CONTROL BLDG.	BP-A	.16	4.4	120	1	15A-1P	2 #12 + GRND. - 20mmC.
EX-4	EXHAUST FAN - FEMALE W.C.	CONTROL BLDG.	BP-A	.16	4.4	120	1	15A-1P	2 #12 + GRND. - 20mmC.
EX-5	EXHAUST FAN - ENTRY	CONTROL BLDG.	BP-A	.25	5.8	120	1	15A-1P	2 #12 + GRND. - 20mmC.
EX-10	EXHAUST FAN MALE WASHROOM	CONTROL BLDG.	BP-A	.25	5.8	120	1	15A-1P	2 #12 + GRND. - 20mmC.
EX-11	FUME HOOD	CONTROL BLDG.	BP-EA	.16	4.4	120	1	15A-1P	2 #12 + GRND. - 20mmC.
P-21,22	SUBMERSIBLE PUMP CONTROL PANEL	PUMPING STATION	CDP-X1	5	6.1	600	3	30A-3P	3 #10 + GRND. - 20mmC.
SC-1	CLARIFIER DRIVE MOTOR #1	CLARIFIER #1	MCC-1	1/2	1.4	600	3	15A-3P	3 #12 + GRND. - 20mmC.
SC-2	CLARIFIER DRIVE MOTOR #2	CLARIFIER #2	MCC-1	1/2	1.4	600	3	15A-3P	3 #12 + GRND. - 20mmC.
PF-1	FOUNDATION DRAIN PUMP	SUBMERSIBLE PUMP STAT. FOR FOUNDATION DRAINS	CDP-X1	1	1.4	600	3	15A-3P	3 #10 + GRND. - 38mmC.
P-29	SUMP PUMP	POLYMER ROOM	MCC-1X	1	1.4	600	3	15A-3P	3 #12 + GRND. - 20mmC.
TE-2	45kVA TRANSFORMER	BLOWER RM.	MCC-1X		43.3	600	3	60A-3P	3 #6 + GRND. - 38mmC.
BLC-1	BLOWER COOLING FAN	BLOWER RM.	MCC-1	1		600	3	15A-3P	3 #12 + GRND. - 20mmC.
BLC-2	BLOWER COOLING FAN	BLOWER RM.	MCC-1	1		600	3	15A-3P	3 #12 + GRND. - 20mmC.
BLC-3	BLOWER COOLING FAN	BLOWER RM.	MCC-1	1		600	3	15A-3P	3 #12 + GRND. - 20mmC.
BLC-4	BLOWER COOLING FAN	BLOWER RM.	MCC-1	1		600	3	15A-3P	3 #12 + GRND. - 20mmC.
BLC-4	BLOWER COOLING FAN	BLOWER RM.	MCC-1	1		600	3	15A-3P	3 #12 + GRND. - 20mmC.

MANUAL STARTER: FEEDER BREAKER	MANUAL STARTER: TOGGLE	MANUAL STARTER: 1Ø CAPACITOR START	MANUAL STARTER: PILOT LIGHT-RUN	MAGNETIC STARTER ◇1: COMBINATION	MAGNETIC STARTER ◇1: REDUCED VOLTAGE	MAGNETIC STARTER ◇1: VARIABLE SPEED DRIVE	MAGNETIC STARTER ◇1: BREAKER TYPE	MAGNETIC STARTER ◇1: 1Ø CAPACITOR START	MAGNETIC STARTER ◇1: CONTROL TRANSFORMER	MAGNETIC STARTER ◇1: IN COVER: HAND/OFF/REMOTE	MAGNETIC STARTER ◇1: IN COVER: ON/OFF	MAGNETIC STARTER ◇1: IN COVER: HAND/OFF/AUTO	MAGNETIC STARTER ◇1: IN COVER: PILOT LIGHT-RUN	MAGNETIC STARTER ◇1: IN COVER: PILOT LIGHT-STOP	MAGNETIC STARTER ◇1: P.F. CAPACITOR CORR.	MAGNETIC STARTER ◇1: THERMISTOR TRIP RELAY	MAGNETIC STARTER ◇1: DELAY ON STARTING (SEC)	REMOTE CONTROL: NOTES	REMOTE CONTROL: ON/OFF	REMOTE CONTROL: WEATHER PROOF	REMOTE CONTROL: PILOT LIGHT-RUN	REMOTE CONTROL: PILOT LIGHT-STOP	DISC. AT MOTOR	REMARKS
●					●			●		●		●	●	●		12	7			●				●	INTERLOCK WITH EF-9 CO-ORDINATE WITH DIV. 15 ◇5
●					●			●		●		●	●	●		14	7	●						●	INTERLOCK WITH HV-1 CO-ORDINATE WITH DIV. 15 ◇5
●					●			●		●		●	●	●											◇5
●					●			●		●		●	●	●											WELDING OUTLET SUPPLY
●						●		●		●		●	●	●		16	5							●	WIRE FLOAT CONTROLS TO STARTER. LOW LEVEL SHUT OFF HIGH LEVEL TO START
						●		●		●		●	●	●		2	5			●				●	
						●		●		●		●	●	●		4	5			●				●	
						●		●		●		●	●	●		6	5			●				●	
						●		●		●		●	●	●		8	5			●				●	
						●		●		●		●	●	●		10	5			●				●	
●						●		●		●		●	●	●		4	4			●	●			●	DISCONNECT SWITCH SUPPLIED AND INSTALLED BY DIVISION 11.
●						●		●		●		●	●	●		18	7			●				●	INTERLOCK WITH EX-6 CO-ORDINATE WITH DIV. 15
●						●		●		●		●	●	●		20	7			●				●	INTERLOCK WITH EX-7, CO-ORDINATE WITH DIV. 15
●	●	●	●													7				●				●	
						●		●		●		●	●	●		22	7			●				●	INTERLOCK WITH HV-2, CO-ORDINATE WITH DIV. 15 ◇5
●	●	●	●													7				●				●	INTERLOCK WITH HV-3, CO-ORDINATE WITH DIV. 15 ◇5
●					●			●		●		●	●	●		10	4								◇5
●																									
																									PROVIDE FEEDER BREAKER UNIT ONLY (FOR FUTURE)
						●		●		●		●	●	●		2	5								
						●		●		●		●	●	●		4	5								
						●		●		●		●	●	●		6	5								
●	●	●	●													7		●		●				●	◇5
●	●	●	●													7		●		●				●	◇5
●																7				●				●	PACKAGED UNIT SUPPLIED AND INSTALLED BY DIV. 15, WIRED BY DIV. 16, CONTROLS WIRED BY DIV. 15
●																7		●		●				●	PACKAGED UNIT SUPPLIED AND INSTALLED BY DIV. 15, WIRED BY DIV. 16, CONTROLS WIRED BY DIV. 15
●	●	●	●													7								●	◇5
●	●	●	●													7								●	◇5
●	●	●	●													7								●	◇5
●	●	●	●													7								●	◇5
●	●	●	●													7								●	INTERLOCK WITH FUME HOOD EX-11. CO-ORDINATE WITH DIV. 15 ◇5
●	●	●	●													7								●	◇5
●	●	●	●													7								●	INTERLOCK WITH EXHAUST FAN EX-5. CO-ORDINATE WITH DIV. 15 ◇5
●					●			●		●		●	●	●		8	5	●	●	●	●	●		●	◇8
●					●			●		●		●	●	●		2	4							●	
●					●			●		●		●	●	●		4	4							●	
●	●	●	●																						
					●			●		●		●	●	●		6	5								FLOAT CONTROL C/W PUMP BY DIV. 11
						●		●		●		●	●	●		4	5							●	
●																									
						●		●		●		●	●	●			5							●	
						●		●		●		●	●	●			5							●	
						●		●		●		●	●	●			5							●	
						●		●		●		●	●	●			5							●	

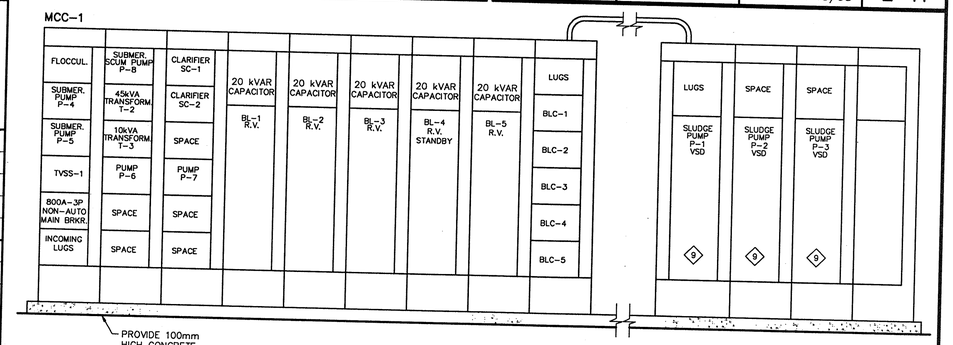

2 / E-11 MOTOR CONTROL CENTER - MCC-1 ELEVATION 1:25

FOR EXACT LAYOUT OF MCC'S USE MOTOR CONTROL MANUAL.

3 / E-11 MOTOR CONTROL CENTERS - MCC-2, MCC-1X, ELEVATIONS 1:25

HEATER SCHEDULE

HEATER #	TYPE	WATTAGE	VOLTAGE	ø	EQUAL TO	DISC. AT UNIT	TOGGLE SW. AT UNIT	REMOTE T-STAT	BUILT-IN T-STAT	BUILT-IN CONTACTOR	FAN/HEAT SWITCH	INTERLOCK TO	REMARKS
(A)	BASEBOARD	1000	208V	1	CHROMALOX			●		●			
(B)	BASEBOARD	1000	208V	1	CHROMALOX			●	●	●			
(C)	RADIANT HEATING PANEL	750	208V	1	AZTEC			●					T-BAR MOUNTED
(C1)	RADIANT HEATING PANEL	500	208V	1	AZTEC			●					SURFACE MOUNTED
(D)	FORCE FLOW	1500	208V	1	CHROMALOX				●				FLUSH MOUNTED
(E)	BASEBOARD	750	208V	1	CHROMALOX			●		●			
(F)	FORCE FLOW	1500	208V	1	CHROMALOX				●				SURFACE MOUNTED

4 / E-11 HEATER SCHEDULE N.T.S.

AS-BUILT

NOTE: REVISED "AS-BUILT" DRAWING. THIS DRAWING HAS BEEN REVISED TO INCORPORATE CHANGES AS INDICATED IN THE CONTRACTOR'S MARKED UP DRAWINGS. CHANGES DONE BY OWNER/OCWA WITHOUT THE CONSULTANT'S INVOLVEMENT ARE NOT INCLUDED ON THE DRAWINGS. CONTRACTOR'S DRAWINGS ARE NOT VERIFIED ON SITE BY ENGINEER. THE ENGINEER DOES NOT TAKE RESPONSIBILITY FOR INFORMATION ON THIS DRAWING THAT IS IN CONFLICT WITH THE EXISTING CONDITON DUE TO INACCURATE OR MISSING INFORMATION ON SOURCE DOCUMENTS PROVIDED.

04/29/1998

WB ID #F:\CAD\1993\93034\ELECT\104\ASBUILT\F:\CAD\1993\93034\ELECT\104\ASBUILT\93034411

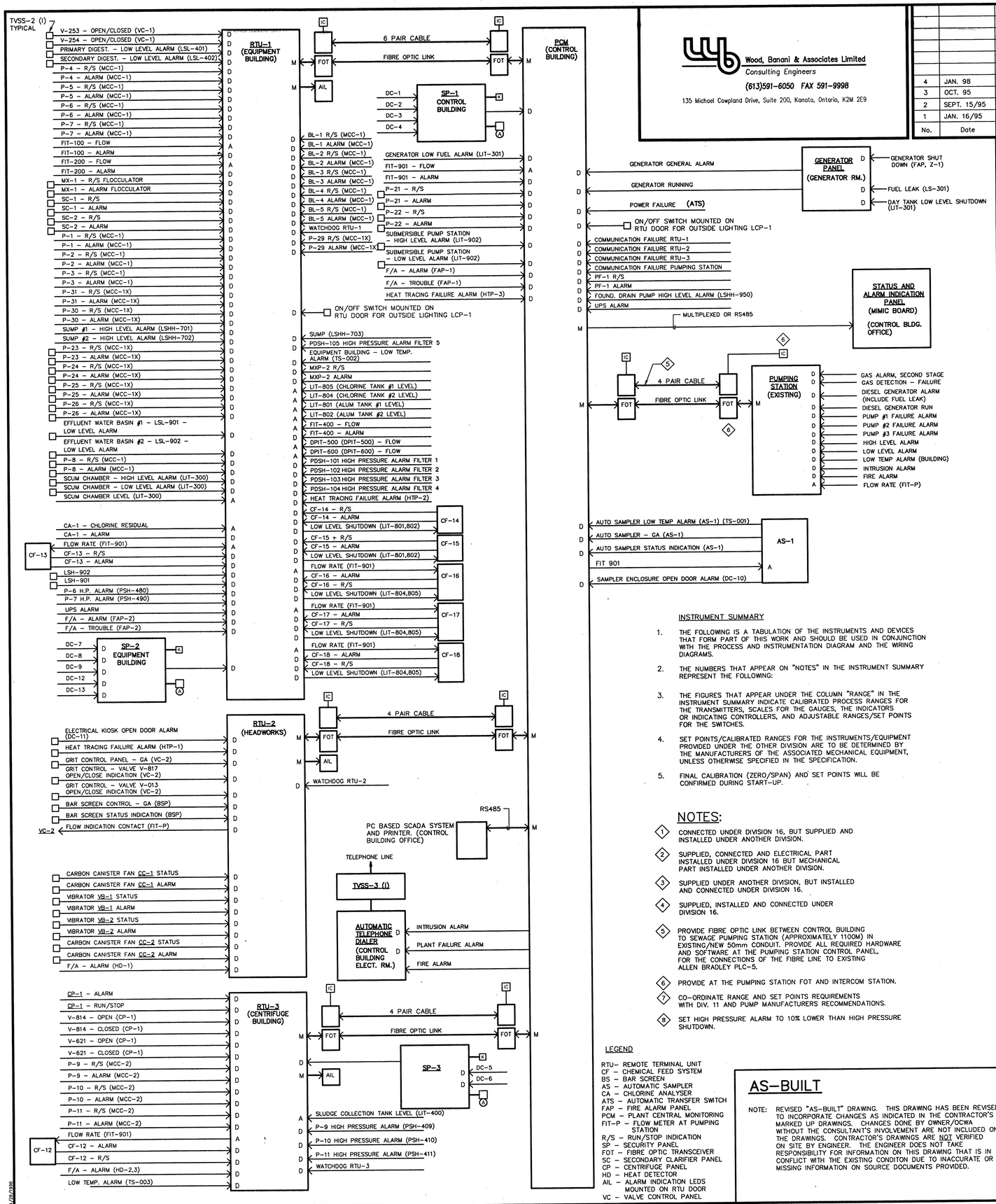

INSTRUMENT SUMMARY

1. THE FOLLOWING IS A TABULATION OF THE INSTRUMENTS AND DEVICES THAT FORM PART OF THIS WORK AND SHOULD BE USED IN CONJUNCTION WITH THE PROCESS AND INSTRUMENTATION DIAGRAM AND THE WIRING DIAGRAMS.
2. THE NUMBERS THAT APPEAR ON "NOTES" IN THE INSTRUMENT SUMMARY REPRESENT THE FOLLOWING:
3. THE FIGURES THAT APPEAR UNDER THE COLUMN "RANGE" IN THE INSTRUMENT SUMMARY INDICATE CALIBRATED PROCESS RANGES FOR THE TRANSMITTERS, SCALES FOR THE GAUGES, THE INDICATORS OR INDICATING CONTROLLERS, AND ADJUSTABLE RANGES/SET POINTS FOR THE SWITCHES.
4. SET POINTS/CALIBRATED RANGES FOR THE INSTRUMENTS/EQUIPMENT PROVIDED UNDER THE OTHER DIVISION ARE TO BE DETERMINED BY THE MANUFACTURERS OF THE ASSOCIATED MECHANICAL EQUIPMENT, UNLESS OTHERWISE SPECIFIED IN THE SPECIFICATION.
5. FINAL CALIBRATION (ZERO/SPAN) AND SET POINTS WILL BE CONFIRMED DURING START-UP.

NOTES:

1. CONNECTED UNDER DIVISION 16, BUT SUPPLIED AND INSTALLED UNDER ANOTHER DIVISION.
2. SUPPLIED, CONNECTED AND ELECTRICAL PART INSTALLED UNDER DIVISION 16 BUT MECHANICAL PART INSTALLED UNDER ANOTHER DIVISION.
3. SUPPLIED UNDER ANOTHER DIVISION, BUT INSTALLED AND CONNECTED UNDER DIVISION 16.
4. SUPPLIED, INSTALLED AND CONNECTED UNDER DIVISION 16.
5. PROVIDE FIBRE OPTIC LINK BETWEEN CONTROL BUILDING TO SEWAGE PUMPING STATION (APPROXIMATELY 1100M) IN EXISTING/NEW 50mm CONDUIT. PROVIDE ALL REQUIRED HARDWARE AND SOFTWARE AT THE PUMPING STATION CONTROL PANEL. FOR THE CONNECTIONS OF THE FIBRE LINE TO EXISTING ALLEN BRADLEY PLC-5.
6. PROVIDE AT THE PUMPING STATION FOT AND INTERCOM STATION.
7. CO-ORDINATE RANGE AND SET POINTS REQUIREMENTS WITH DIV. 11 AND PUMP MANUFACTURERS RECOMMENDATIONS.
8. SET HIGH PRESSURE ALARM TO 10% LOWER THAN HIGH PRESSURE SHUTDOWN.

LEGEND

RTU– REMOTE TERMINAL UNIT
CF – CHEMICAL FEED SYSTEM
BS – BAR SCREEN
AS – AUTOMATIC SAMPLER
CA – CHLORINE ANALYSER
ATS – AUTOMATIC TRANSFER SWITCH
FAP – FIRE ALARM PANEL
PCM – PLANT CENTRAL MONITORING
FIT–P – FLOW METER AT PUMPING STATION
R/S – RUN/STOP INDICATION
SP – SECURITY PANEL
FOT – FIBRE OPTIC TRANSCEIVER
SC – SECONDARY CLARIFIER PANEL
CP – CENTRIFUGE PANEL
HD – HEAT DETECTOR
AIL – ALARM INDICATION LEDS MOUNTED ON RTU DOOR
VC – VALVE CONTROL PANEL

AS–BUILT

NOTE: REVISED "AS–BUILT" DRAWING. THIS DRAWING HAS BEEN REVISED TO INCORPORATE CHANGES AS INDICATED IN THE CONTRACTOR'S MARKED UP DRAWINGS. CHANGES DONE BY OWNER/OCWA WITHOUT THE CONSULTANT'S INVOLVEMENT ARE NOT INCLUDED ON THE DRAWINGS. CONTRACTOR'S DRAWINGS ARE NOT VERIFIED ON SITE BY ENGINEER. THE ENGINEER DOES NOT TAKE RESPONSIBILITY FOR INFORMATION ON THIS DRAWING THAT IS IN CONFLICT WITH THE EXISTING CONDITON DUE TO INACCURATE OR MISSING INFORMATION ON SOURCE DOCUMENTS PROVIDED.

Wood, Banani & Associates Limited
Consulting Engineers
(613)591–6050 FAX 591–9998
135 Michael Cowpland Drive, Suite 200, Kanata, Ontario, K2M 2E9

No.	Date	Revision
4	JAN. 98	AS–BUILT
3	OCT. 95	ISSUED FOR TENDER
2	SEPT. 15/95	ISSUED FOR REVIEW
1	JAN. 16/95	ISSUED FOR M.O.E.E. APPROVAL

McNEELY ENGINEERING CONSULTANTS LTD.

Owner: TOWNSHIP OF OSNABRUCK
Project: INGLESIDE SEWAGE TREATMENT PLANT
O.C.W.A. SEWAGE WORKS PROJECT No. 40–0797
Title: CONTROL SYSTEM BLOCK DIAGRAM AND INSTRUMENTATION INDEX

Design	G.M.	Scale	AS SHOWN	Proj. No.	93034–104	Dwg No.
Drawn	J.A.S.	Check	C.L.W.	Date	SEPT. 15/95	E–12

INSTRUMENT INDEX

TAG #	EQUIPMENT DEVICE/TYPE	SERVICE	LOCATION	RANGE	SET POINT	NOTES
LE/LIT – 902	ULTRASONIC LEVEL INDICAT./TRANSMITTER	SUBMERSIBLE PUMP STATION CONTROL	PUMP. STN./CONTROL BLDG	0 – 4000mm	E–16	4
LE/LIT – 300	ULTRASONIC LEVEL INDICAT./TRANSMITTER	SCUM PUMP CONTROL	SCUM CHAMBER/BLOWER ROOM	0 – 5000mm	E–16	4
FE/FIT – 901	ULTRASONIC OPEN CHANNEL MONITOR/ FLOW TRANSMITTER	EFFLUENT FLOW METER	FLUME / CONTROL BUILDING	0 – 3000mm		4
TE–300	TEMPERATURE SENSOR	SCUM PUMP CONTROL	SCUM CHAMBER			4
TE–902	TEMPERATURE SENSOR	SUBMERSIBLE PUMPING STATION	SUBMERSIBLE PUMP STATION			4
TE–901	TEMPERATURE SENSOR	EFFLUENT FLOW METER	FLUME			4
FS–301	LEVEL SWITCH – ULTRASONIC GAP	DIESEL GENERATOR DAY TANK FUEL LEAK	GENERATOR ROOM			4
LIT–801	LEVEL INDICATION – PRESSURE TRANSMITTER	ALUM TANK #1 LEVEL	TANK T–101 CHEMICAL ROOM	0 – 5000mm	L – 1000 H – 3500	2
LI–801	LEVEL INDICATOR	ALUM TANK #1 LEVEL	TRUCK UNLOADING BAY	0 – 5000mm	H – 3500	4
LIT–802	LEVEL INDICATION – PRESSURE TRANSMITTER	ALUM TANK #2 LEVEL	TANK T–102 CHEMICAL ROOM	0 – 5000mm	L – 1000 H – 3500	2
LI–802	LEVEL INDICATOR	ALUM TANK #2 LEVEL	TRUCK UNLOADING BAY	0 – 5000mm	H – 3500	4
LIT–804	LEVEL INDICATION – PRESSURE TRANSMITTER	CHLORINE TANK #2 LEVEL	TANK T–104 CHEMICAL ROOM	0 – 4000mm	L – 610 H – 2300	2
LI–804	LEVEL INDICATOR	CHLORINE TANK #2 LEVEL	TRUCK UNLOADING BAY	0 – 4000mm	H – 2300	4
LIT–805	LEVEL INDICATION – PRESSURE TRANSMITTER	CHLORINE TANK #1 LEVEL	TANK T–103 CHEMICAL ROOM	0 – 4000mm	L – 610 H – 2300	2
LI–805	LEVEL INDICATOR	CHLORINE TANK #1 LEVEL	TRUCK UNLOADING BAY	0 – 4000mm	H – 2300	4
LE/LIT–400	ULTRASONIC LEVEL INDICATOR/TRANSMITTER	THICKENED SLUDGE COLLECTION TANK	CENTRIFUGE BUILDING	0 – 1500mm	E–16	4
FE/FIT–100	150 Ø, DI, MAGNETIC FLOW METER	RAS/WAS – PUMP P–1	METER CHAMBER/BLOWER RM	0–100 l/s	47 l/s	2
FE/FIT–200	150 Ø, DI, MAGNETIC FLOW METER	RAS/WAS – PUMP P–2	METER CHAMBER/BLOWER RM	0–100 l/s	47 l/s	2
FE/FIT–400	50 Ø, DI, MAGNETIC FLOW METER	DIGESTER TO CENTRIFUGE	CENTRIFUGE BUILDING	0–5 l/s	1.2 l/s	2
LE/LIT–301	CAPACITANCE LEVEL INDICAT./TRANSMITTER	GENERATOR DAY TANK LEVEL	GENERATOR ROOM	0 – 2000mm	E–16	4
AE/AIT–900	ANALYTICAL SENSOR/CONTROLLER	PLANT EFFLUENT CHLORINE	EFF. WATER BASIN/BLOWER RM	0–20 PPM		1
PDSH–101	DIFFERENTIAL PRESSURE SWITCH – HIGH	FILTER – BL–1	BLOWER ROOM	0–0.5 PSI	0.1 PSI	2
PDSH–102	DIFFERENTIAL PRESSURE SWITCH – HIGH	FILTER – BL–2	BLOWER ROOM	0–0.5 PSI	0.1 PSI	2
PDSH–103	DIFFERENTIAL PRESSURE SWITCH – HIGH	FILTER – BL–3	BLOWER ROOM	0–0.5 PSI	0.1 PSI	2
PDSH–104	DIFFERENTIAL PRESSURE SWITCH – HIGH	FILTER – BL–4	BLOWER ROOM	0–0.5 PSI	0.1 PSI	2
PDSH–105	DIFFERENTIAL PRESSURE SWITCH – HIGH	FILTER – BL–5	BLOWER ROOM	0–0.5 PSI	0.1 PSI	2
FIT–500	FLOW INDICATE/TRANS/TOTAL	FE–500	BLOWER ROOM			
LSL–901	LEVEL SWITCH – FLOAT	LOW/HIGH LIFT PUMPS P–23, P–25 – LOW LEVEL SHUTDOWN	EFFLUENT WATER BASIN #1		74.600	4
LSL–902	LEVEL SWITCH – FLOAT	LOW/HIGH LIFT PUMPS P–24, P–26 – LOW LEVEL SHUTDOWN	EFFLUENT WATER BASIN #2		74.600	4
LSH–901	LEVEL SWITCH – FLOAT	EFFLUENT WATER BASIN #1 – HIGH LEVEL ALARM	EFFLUENT WATER BASIN #1			4
LSH–902	LEVEL SWITCH – FLOAT	EFFLUENT WATER BASIN #2 – HIGH LEVEL ALARM	EFFLUENT WATER BASIN #2			4
LSH–001	LEVEL SWITCH – FLOAT	FLOOD ALARM – VALVE CHAMBER	VALVE CHAMBER		73.800	4
FIT–600	FLOW INDICATE/TRANS/TOTAL	FE–600	BLOWER ROOM			
FE–500	FLOW METER – PITOT TUBE	250 Ø, SS, AERATION AIR LINE	BLOWER ROOM	0–1000 l/s		2
DPIT–500	DIFFERENTIAL PRESSURE INDICATING TRANSMITTER	FLOW METER FE–500	BLOWER ROOM	7		2
FE–600	FLOW METER – PITOT TUBE	400 Ø, SS, AERATION AIR LINE	BLOWER ROOM	0–2500 l/s		2
DPIT–600	DIFFERENTIAL PRESSURE INDICATING TRANSMITTER	FLOW METER FE–500	BLOWER ROOM	7		2
PSH–900	PRESSURE SWITCH – HIGH	HIGH PRESSURE – EFFLUENT WATER PUMP CONTROL – P–25, P–26	CHEMICAL ROOM	0 –150 PSI	80 PSI	2
PSL–900	PRESSURE SWITCH – LOW	LOW PRESSURE – EFFLUENT WATER PUMP CONTROL – P–25, P–26	CHEMICAL ROOM	0 –120 PSI	60 PSI	2
LSL–401	LEVEL SWITCH – FLOAT	LOW LEVEL SHUTDOWN – P–4	PRIMARY DIGESTER		75.100	4
LSL–402	LEVEL SWITCH – FLOAT	LOW LEVEL SHUTDOWN – P–5	SECONDARY DIGESTER		75.100	4
LSL–701	LEVEL SWITCH – FLOAT	STOP PUMP P–31	SUMP #1		7	4
LSH–701	LEVEL SWITCH – FLOAT	START PUMP P–31	SUMP #1		7	4
LSHH–701	LEVEL SWITCH – FLOAT	HIGH LEVEL ALARM – SUMP #1	SUMP #1		7	4
LSL–702	LEVEL SWITCH – FLOAT	STOP PUMP P–30	SUMP #2		7	4
LSH–702	LEVEL SWITCH – FLOAT	START PUMP P–30	SUMP #2		7	4
LSHH–702	LEVEL SWITCH – FLOAT	HIGH LEVEL ALARM – SUMP #2	SUMP #2		7	4
A–001	AUDIBLE ALARM	GEN. DAY TANK – HIGH LEVEL ALARM	AT FUEL FILL		95%	4
A–002	AUDIBLE ALARM	ALUM TANK – HIGH LEVEL ALARM	TRUCK UNLOADING BAY		3500	4
A–003	AUDIBLE ALARM	CHLORINE TANK – HIGH LEVEL ALARM	TRUCK UNLOADING BAY		2300	4
TS–001	THERMOSTAT – LOW TEMPERATURE	LOW TEMPERATURE ALARM	SAMPLER AS–1	0 – 40° C	5° C	4
TS–002	THERMOSTAT – LOW TEMPERATURE	LOW TEMPERATURE ALARM	EQUIPMENT BUILDING	0 – 40° C	5° C	4
TS–003	THERMOSTAT – LOW TEMPERATURE	LOW TEMPERATURE ALARM	CENTRIFUGE BUILDING	0 – 40° C	5° C	4
LSL–950	LEVEL SWITCH – FLOAT	STOP PF–1	FOUNDATION PUMP STATION		72.800 M	4
LSH–950	LEVEL SWITCH – FLOAT	START PF–1	FOUNDATION PUMP STATION		74.000 M	4
LSHH–950	LEVEL SWITCH – FLOAT	HIGH LEVEL ALARM	FOUNDATION PUMP STATION		74.300 M	4
PSH–409	PRESSURE SWITCH – HIGH	HIGH PRESS. ALARM AND SHUTDOWN P–9	CENTRIFUGE BUILDING	7	7 8	2
PSH–410	PRESSURE SWITCH – HIGH	HIGH PRESS. ALARM AND SHUTDOWN P–10	CENTRIFUGE BUILDING	7	7 8	2
PSH–411	PRESSURE SWITCH – HIGH	HIGH PRESS. ALARM AND SHUTDOWN P–11	CENTRIFUGE BUILDING	7	7 8	2
PSH–480	PRESSURE SWITCH – HIGH	HIGH PRESS. ALARM AND SHUTDOWN P–6	POLYMER ROOM	7	7 8	2
PSH–490	PRESSURE SWITCH – HIGH	HIGH PRESS. ALARM AND SHUTDOWN P–7	POLYMER ROOM	7	7 8	2

04/28/1998

WB ID #F:\CAD\1993\93034\ELECT\104\ASBUILT\F:\CAD\1993\93034\ELECT\104\ASBUILT\93034412

LEGEND	
SYMBOL	DESCRIPTION
MCC-1	MOTOR CONTROL CENTER #1
⊠	LOOSE MAGNETIC STARTER
☐	REMOTE ON/OFF STATION
◇	PLANT CENTRAL MONITORING
RTU-1	REMOTE TERMINAL UNIT #1
———	PROVIDED BY ANOTHER DIVISION
———	PROVIDED BY DIVISION 16
AS	AUTO SAMPLER
CA	CHLORINE ANALYZER
BS	BAR SCREEN CONTROL PANEL
CF	CHEMICAL FEED CONTROL PANEL
PC	PUMP CONTROL PANEL
VC	VALVE CONTROL PANEL
GSP	GRIT SYSTEM PANEL
MX-1	MIXER #1 PANEL
SC	SECONDARY CLARIFIER PANEL
CP-1	CENTRIFUGE PANEL
S	REMOTE ON/OFF/SPEED CONTROL
I	INTERLOCK

AS-BUILT

NOTE: REVISED "AS-BUILT" DRAWING. THIS DRAWING HAS BEEN REVISED TO INCORPORATE CHANGES AS INDICATED IN THE CONTRACTOR'S MARKED UP DRAWINGS. CHANGES DONE BY OWNER/OCWA WITHOUT THE CONSULTANT'S INVOLVEMENT ARE NOT INCLUDED ON THE DRAWINGS. CONTRACTOR'S DRAWINGS ARE NOT VERIFIED ON SITE BY ENGINEER. THE ENGINEER DOES NOT TAKE RESPONSIBILITY FOR INFORMATION ON THIS DRAWING THAT IS IN CONFLICT WITH THE EXISTING CONDITION DUE TO INACCURATE OR MISSING INFORMATION ON SOURCE DOCUMENTS PROVIDED.

Wood, Banani & Associates Limited
Consulting Engineers
(613)591-6050 FAX 591-9998
135 Michael Cowpland Drive, Suite 200, Kanata, Ontario, K2M 2E9

No.	Date	Revision
4	JAN. 98	AS-BUILT
3	OCT. 95	ISSUED FOR TENDER
2	SEPT. 15/95	ISSUED FOR REVIEW
1	JAN. 16/95	ISSUED FOR M.O.E.E. APPROVAL

McNEELY ENGINEERING CONSULTANTS LTD.

Owner: TOWNSHIP OF OSNABRUCK

Project: INGLESIDE SEWAGE TREATMENT PLANT
O.C.W.A. SEWAGE WORKS PROJECT No. 40-0797

Title: PROCESS AND INSTRUMENTATION DIAGRAM I

Design	G.M.	Scale	AS SHOWN	Proj. No.	93034-104	Dwg No.
Drawn	J.A.S.	Check	C.L.W.	Date	SEPT. 15/95	E-13

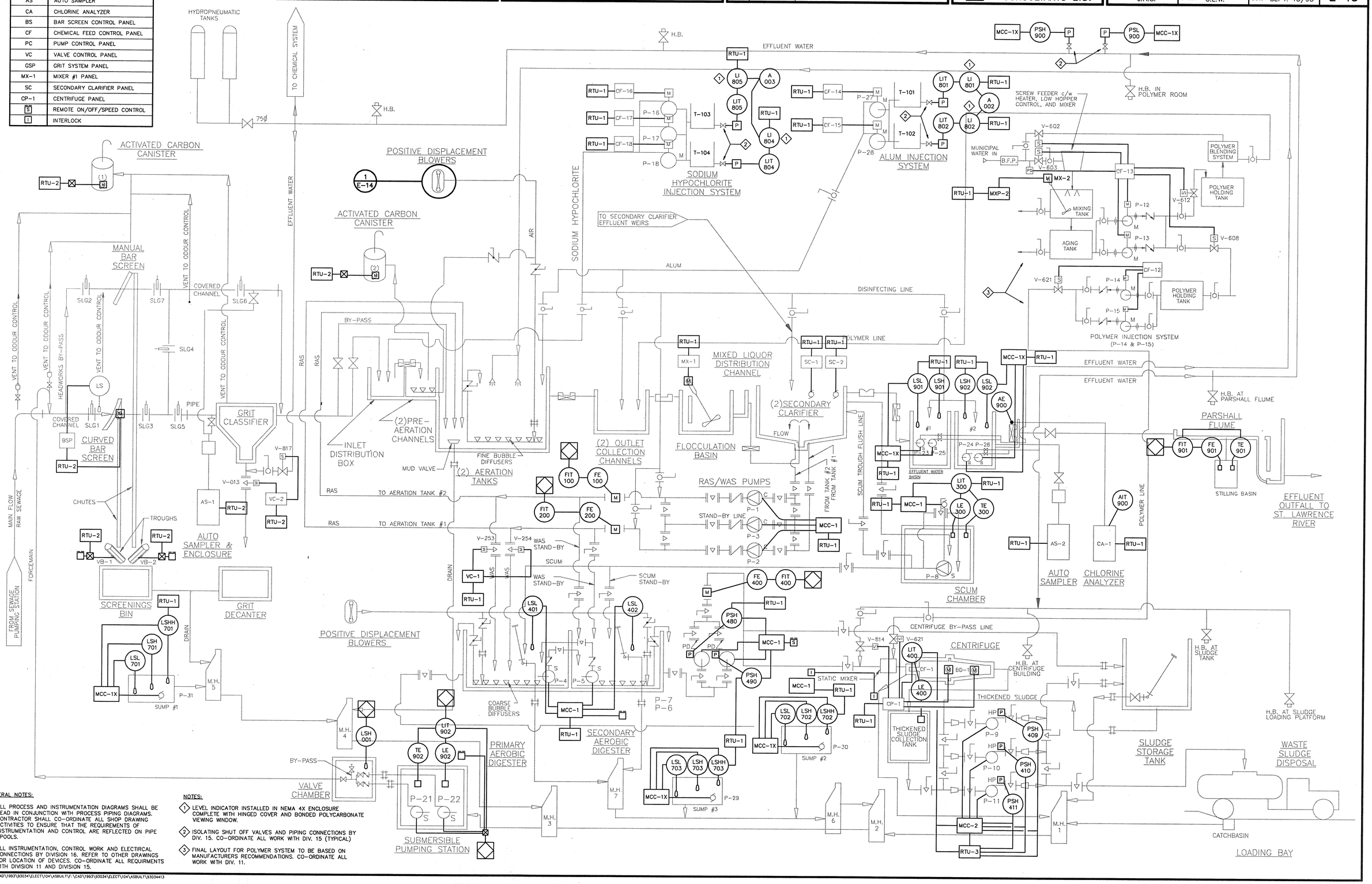

GENERAL NOTES:

1. ALL PROCESS AND INSTRUMENTATION DIAGRAMS SHALL BE READ IN CONJUNCTION WITH PROCESS PIPING DIAGRAMS. CONTRACTOR SHALL CO-ORDINATE ALL SHOP DRAWING ACTIVITIES TO ENSURE THAT THE REQUIREMENTS OF INSTRUMENTATION AND CONTROL ARE REFLECTED ON PIPE SPOOLS.
2. ALL INSTRUMENTATION, CONTROL WORK AND ELECTRCAL CONNECTIONS BY DIVISION 16. REFER TO OTHER DRAWINGS FOR LOCATION OF DEVICES. CO-ORDINATE ALL REQUIRMENTS WITH DIVISION 11 AND DIVISION 15.

NOTES:

1. LEVEL INDICATOR INSTALLED IN NEMA 4X ENCLOSURE COMPLETE WITH HINGED COVER AND BONDED POLYCARBONATE VIEWING WINDOW.
2. ISOLATING SHUT OFF VALVES AND PIPING CONNECTIONS BY DIV. 15. CO-ORDINATE ALL WORK WITH DIV. 15 (TYPICAL)
3. FINAL LAYOUT FOR POLYMER SYSTEM TO BE BASED ON MANUFACTURERS RECOMMENDATIONS. CO-ORDINATE ALL WORK WITH DIV. 11.

PLOTTED: 95/09/28
MS D #: \CAD\1993\93034\ELECT\104\ASBUILT\; \CAD\1993\93034\ELECT\104\ASBUILT\93034113

GENERAL NOTES:

1. ALL PROCESS AND INSTRUMENTATION DIAGRAMS SHALL BE READ IN CONJUNCTION WITH PROCESS PIPING DIAGRAMS. CONTRACTOR SHALL CO-ORDINATE ALL SHOP DRAWING ACTIVITIES TO ENSURE THAT THE REQUIREMENTS OF INSTRUMENTATION AND CONTROL ARE REFLECTED ON PIPE SPOOLS.
2. ALL INSTRUMENTATION, CONTROL WORK AND ELECTIRCAL CONNECTIONS BY DIVISION 16. REFER TO OTHER DRAWINGS FOR LOCATION OF DEVICES. CO-ORDINATE ALL REQUIRMENTS WITH DIVISION 11 AND DIVISION 15.
3. ISOLATING SHUT-OFF VALVES AND PIPING CONNECTIONS BY DIV. 15. CO-ORDINATE ALL WORK WITH DIV. 15 (TYPICAL)

AS-BUILT

NOTE: REVISED "AS-BUILT" DRAWING. THIS DRAWING HAS BEEN REVISED TO INCORPORATE CHANGES AS INDICATED IN THE CONTRACTOR'S MARKED UP DRAWINGS. CHANGES DONE BY OWNER/OCWA WITHOUT THE CONSULTANT'S INVOLVEMENT ARE NOT INCLUDED ON THE DRAWINGS. CONTRACTOR'S DRAWINGS ARE NOT VERIFIED ON SITE BY ENGINEER. THE ENGINEER DOES NOT TAKE RESPONSIBILITY FOR INFORMATION ON THIS DRAWING THAT IS IN CONFLICT WITH THE EXISTING CONDITION DUE TO INACCURATE OR MISSING INFORMATION ON SOURCE DOCUMENTS PROVIDED.

Wood, Banani & Associates Limited
Consulting Engineers
(613)591-6050 FAX 591-9998
135 Michael Cowpland Drive, Suite 200, Kanata, Ontario, K2M 2E9

No.	Date	Revision
4	JAN. 98	AS-BUILT
3	OCT. 95	ISSUED FOR TENDER
2	SEPT. 15/95	ISSUED FOR REVIEW
1	JAN. 16/95	ISSUED FOR M.O.E.E. APPROVAL

McNEELY ENGINEERING CONSULTANTS LTD.

Owner: TOWNSHIP OF OSNABRUCK
Project: INGLESIDE SEWAGE TREATMENT PLANT
O.C.W.A. SEWAGE WORKS PROJECT No. 40-0797
Title: PROCESS AND INSTRUMENTATION DIAGRAM II

Design	G.M.	Scale	AS SHOWN	Proj. No. 93034-104	Dwg No. E-14
Drawn	J.A.S.	Check	C.L.W.	Date SEPT. 15/95	

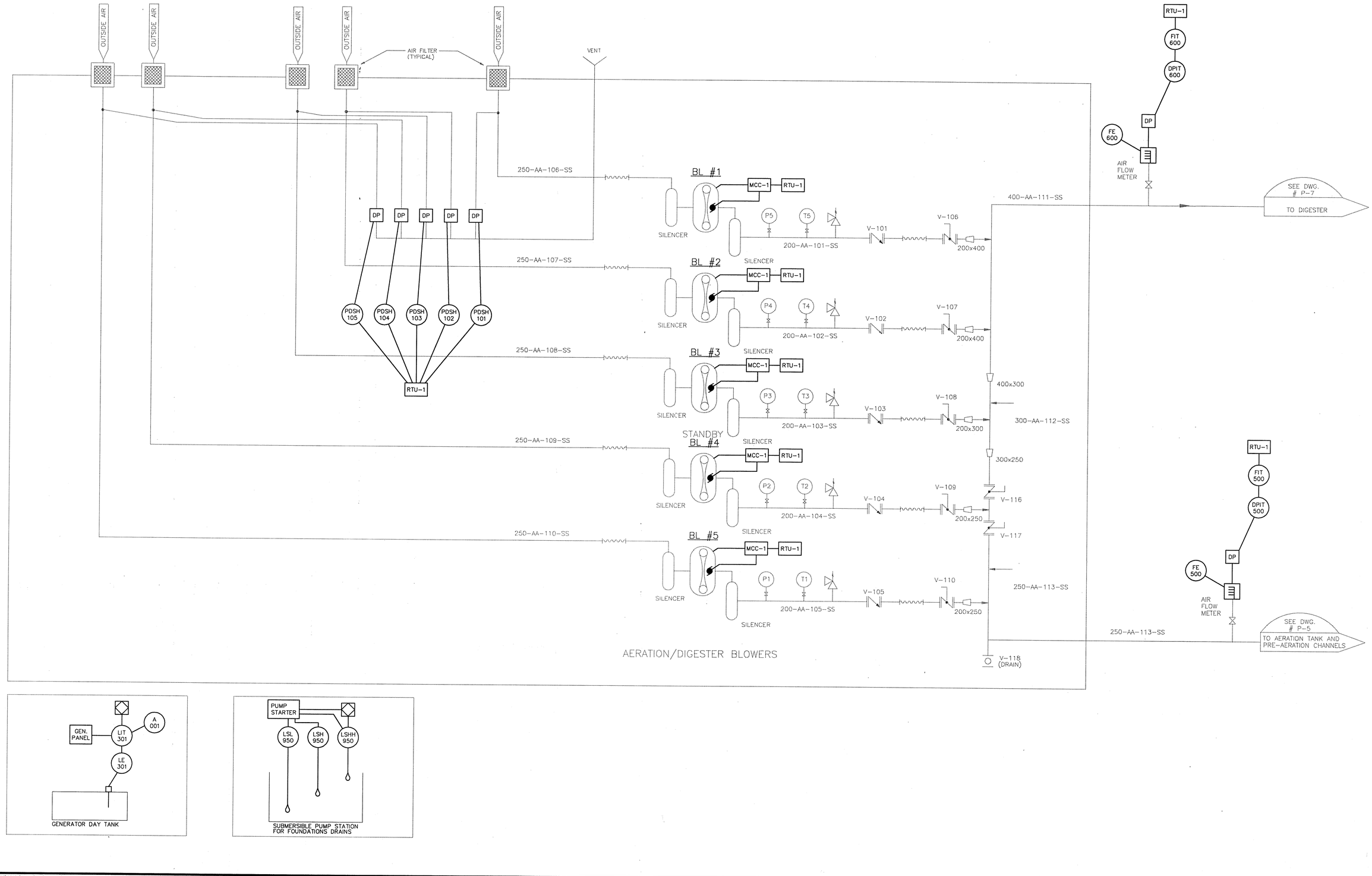

07/10/1998

WB ID #F:\CAD\1993\93034\ELECT\104\ASBUILT\93034414

AS-BUILT

NOTE: REVISED "AS-BUILT" DRAWING. THIS DRAWING HAS BEEN REVISED TO INCORPORATE CHANGES AS INDICATED IN THE CONTRACTOR'S MARKED UP DRAWINGS. CHANGES DONE BY OWNER/OCWA WITHOUT THE CONSULTANT'S INVOLVEMENT ARE NOT INCLUDED ON THE DRAWINGS. CONTRACTOR'S DRAWINGS ARE NOT VERIFIED ON SITE BY ENGINEER. THE ENGINEER DOES NOT TAKE RESPONSIBILITY FOR INFORMATION ON THIS DRAWING THAT IS IN CONFLICT WITH THE EXISTING CONDITON DUE TO INACCURATE OR MISSING INFORMATION ON SOURCE DOCUMENTS PROVIDED.

Wood, Banani & Associates Limited
Consulting Engineers
(613)591-6050 FAX 591-9998
135 Michael Cowpland Drive, Suite 200, Kanata, Ontario, K2M 2E9

No.	Date	Revision
4	JAN. 98	AS-BUILT
3	OCT. 95	ISSUED FOR TENDER
2	SEPT. 15/95	ISSUED FOR REVIEW
1	JAN. 16/95	ISSUED FOR M.O.E.E. APPROVAL

McNEELY ENGINEERING CONSULTANTS LTD.

Owner: TOWNSHIP OF OSNABRUCK

Project: INGLESIDE SEWAGE TREATMENT PLANT
O.C.W.A. SEWAGE WORKS PROJECT No. 40-0797

Title: CONTROLS - I

Design	G.M.	Scale	AS SHOWN	Proj. No. 93034-104	Dwg No.
Drawn	J.A.S.	Check	C.L.W.	Date SEPT. 15/95	E-15

1.0 GENERAL REQUIREMENTS FOR MOTOR STARTERS AND CONTROLS:

.1 MOTOR CIRCUIT PROTECTOR TYPE BREAKER/DISCONNECT.

.2 NEMA RATED CONTACTORS AND OVERLOADS.

.3 HRC FUSE PROTECTION ON PRIMARY AND SECONDARY OF CONTROL POWER TRANSFORMERS.

.4 TIME DELAY (0 - 60 SEC) FOR EACH FLOAT SWITCH INPUT.

.5 TIME DELAY (0 - 120 SEC) ON STARTING.

.6 OVERLOAD ALARM INDICATION LIGHT.

.7 LATCH ALL ALARM LIGHTS, PROVIDE ALARM RESET BUTTON.

.8 ELAPSED TIME METER.

.9 OVERLOAD RESET BUTTON ON COVER.

.10 GENERAL ALARM TIME DELAY RELAY (0 - 120 SEC) FOR REMOTE MONITORING TO OPERATE ON ANY ALARM CONDITION (IE. OVERLOAD, VOLTAGE, HIGH LEVEL, LOW LEVEL, ETC.).

.11 FOR MOTOR SIZE 5 H.P. AND HIGHER, PROVIDE 3 PHASE VOLTAGE MONITOR.

.12 FOR MOTOR SIZE 7.5 H.P. AND HIGHER, PROVIDE POWER FACTOR CORRECTION CAPACITORS C/W FUSE AND BLOWN FUSE INDICATORS.

.13 FOR MOTOR SIZE 10 H.P. AND HIGHER, PROVIDE THERMISTOR TRIP RELAY.

.14 UNLESS OTHERWISE INDICATED (IE: VFD,SOFT START), FOR MOTOR SIZE 10 H.P. AND HIGHER, PROVIDE REDUCED VOLTAGE, CLOSED TRANSITION, AUTO-TRANSFORMER STARTER.

.15 PROVIDE ISOLATION TRANSFORMER FOR EACH STARTER THAT INCLUDES VARIABLE SPEED DRIVE.

.16 PROVIDE PILOT LIGHTS FOR "RUN" AND "STOP".

.17 ALL PILOT LIGHTS SHALL BE LED TYPE.

.18 ALL TIME DELAY RELAYS SHALL BE ELECTRONIC TYPE.

.19 FOR MOTORS 5 H.P. AND HIGHER, PROVIDE CTs, AMMETER AND PHASE SELECTOR SWITCH.

.20 ALL CONTROLS SHALL OPERATE ON 120 V AC.

.21 VARIABLE SPEED DRIVE STARTERS SHALL:
.1 INCLUDE OUTPUT CONTACTOR.
.2 INCLUDE DRIVE FAIL ALARM LIGHT ON COVER.
.3 INCLUDE RUN LIGHT CONTROLLED BY THE DRIVE.
.4 NOT INCLUDE POWER FACTOR CORRECTION CAPACITORS.

.22 FOR AUTO-TRANSFORMER STARTERS, PROVIDE TWO TEMPERATURE CONTACTS, ONE FOR ATR OVER TEMPERATURE ALARM LIGHT, AND SECOND FOR ALARM RELAY AND TRIP.

.23 ALL CONTROL RELAYS SHALL HAVE FIELD CONVERTABLE (N.O./N.C.) CONTACTS.

.24 REFER TO SPECIFICATION SECTIONS 16811, 16820, 16825, 16700.

.25 PROVIDE MOTOR "RUN" CONTACTS IN EACH STARTER FOR REMOTE MONITORING.

.26 ALL OUTDOOR PANELS SHALL BE NEMA 4X STAINLESS STEEL ENCLOSURE C/W HEATER AND THERMOSTAT.

.27 ALL STARTERS AND CONTROL PANELS SHALL RESTART AUTOMATICALLY AFTER POWER FAILURE (AFTER TIME DELAY ON STARTING).

.28 PROVIDE TVSS UNIT ON 120 V CONTROL POWER CIRCUIT.

.29 LOW LEVEL SHUTDOWN AND/OR HIGH PRESSURE SHUTDOWN SHALL NOT BE BY-PASSED IN THE "HAND" MODE.

.30 PROVIDE CONTROL RELAYS AS REQUIRED WHERE ONE INPUT CONTROLS MORE THAN ONE DEVICE, ALARMS AND INTERLOCKING.

.31 PROVIDE MUSHROOM TYPE LOCKOUT STOP BUTTON IN EACH STARTER.

2.0 BLOWERS (BL-1, 2, 3, 4, 5) CONTROL:

.1 STARTERS AND CONTROLS LOCATED IN MCC-1.

.2 IN AUTO MODE, BLOWER START/STOP SHALL BE CONTROLLED BY PROGRAMMABLE TIMER (PROVIDE ONE TIMER IN EACH BLOWER STARTER).

.3 STARTER TO INCLUDE INTERLOCK WITH HIGH TEMPERATURE SWITCH LOCATED IN THE BLOWER.

.4 PROVIDE INTERLOCK WITH MOTORIZED DUMPERS AS PER DIVISION 15 REQUIREMENTS.

.5 PROVIDE STARTER AND ACCESSORIES AS PER GENERAL REQUIREMENTS LISTED ON DRAWING.

.6 PROVIDE INTERLOCK WITH THE FOLLOWING DEVICES:
- HIGH TEMP CUTOUT SWITCH
- PRESSURE SWITCH
- HIGH BEARING TEMPERATURE SENSOR
PROVIDE ALARM INDICATION LIGHTS ON STARTER COVER FOR EACH ALARM. ALL ABOVE ALARMS SHALL SHUTDOWN BLOWER.

.7 INTERLOCK BLOWER MOTOR TO CORRESPONDING COOLING FAN. BLOWER MOTOR TIME DELAY START, FIVE SECONDS AFTER COOLING FAN STARTS. COOLING FAN TIME DELAY STOP FIVE MINUTES AFTER BLOWER MOTOR STOPS. START AND STOP TIME DELAYS SHALL BVE ADJUSTABLE.

3.0 RAS/WAS PUMPS (P-1, 2, 3) CONTROL:

.1 VFD TYPE STARTER, MANUAL CONTROL OF SPEED.

.2 PROVIDE MANUAL SPEED ADJUSTMENT BUTTON ON COVER.

.3 PROVIDE % SPEED INDICATION METER ON COVER.

.4 PROVIDE PROGRAMMABLE TIMER FOR PUMP START/STOP IN AUTO MODE (ONE TIMER IN EACH STARTER).

.5 PROVIDE ALL ACCESSORIES AS PER GENERAL REQUIREMENTS LISTED ON DRAWING.

.6 STARTERS AND CONTROLS LOCATED IN MCC-1.

4.0 SUBMERSIBLE DIGESTER PUMPS (P-4, 5) CONTROL:

.1 IN REMOTE MODE, PUMPS SHALL BE START/STOP BY REMOTE ON/OFF STATIONS LOCATED ON TOP OF CATWALK.

.2 P-4 SHALL SHUT DOWN UPON LOW LEVEL IN PRIMARY DIGESTER (LSL-401).

.3 P-5 SHALL SHUT DOWN UPON LOW LEVEL IN SECONDARY DIGESTER (LSL-402).

.4 PROVIDE ALL ACCESSORIES AS PER GENERAL REQUIREMENTS LISTED ON DRAWING.

.5 STARTER AND CONTROL LOCATED IN MCC-1.

5.0 DIGESTED SLUDGE PUMPS (P-6, 7) CONTROL (BY DIV. 11):

.1 VFD TYPE STARTER, MANUAL CONTROL OF SPEED (STARTERS FOR P-6, P-7 PROVIDED BY DIV. 11.).

.2 PROVIDE MANUAL SPEED ADJUSTMENT BUTTON ON COVER.

.3 PROVIDE % SPEED INDICATION METER ON COVER.

.4 PROVIDE PROGRAMMABLE TIMER FOR PUMP START/STOP IN AUTO MODE (ONE TIMER IN EACH STARTER).

.5 PROVIDE ACCESSORIES AS PER GENERAL REQUIREMENTS LISTED ON DRAWING.

.6 STARTER AND CONTROL LOCATED IN MCC-1.

.7 P-6 & 7 SHALL SHUTDOWN UPON LOW LEVEL IN SECONDARY DIGESTER TANK (LSL-402).

.8 PROVIDE REMOTE CONTROL PANEL MOUNTED IN CENTRIFUGE BUILDING. PANEL SHALL INCLUDE FOR EACH PUMP THE FOLLOWING: ON/OFF, SPEED ADJUSTMENT, PILOT LIGHT "RUN", PILOT LIGHT "STOP", PILOT LIGHT "FAIL", % SPEED METER.

.9 PROVIDE INTERLOCK BETWEEN P-6,7 AND CENTRIFUGE SO THAT P-6 OR P-7 MUST RUN IN ORDER TO START THE CENTRIFUGE.

.10 PROVDE DUAL SET POINTS HIGH PRESSURE SWITCHES ON DISCHARGE OF PUMPS. FIRST SET POINT TO PROVIDE HIGH PRESSURE ALARM TO RTU-1. SECOND SET POINT TO HARDWIRED TO STARTERS TO SHUTDOWN PUMPS.

6.0 CHOPPER SCUM PUMP (P-8) CONTROL:

.1 CONTROLLED BY LIT-300 IN AUTO MODE.

.2 REFER TO DRAWING FOR ELEVATION SET POINTS.

.3 PROVIDE ACCESSORIES AS PER GENERAL REQUIREMENTS LISTED ON DRAWING.

.4 STARTER AND CONTROL LOCATED IN MCC-1.

7.0 THICKENED SLUDGE TRANSFER AND TRUCK LOADING PUMPS (P-9, 10, 11) CONTROL:

.1 P-9 SHALL BE CONTROLLED BY LIT-400 FOR START AND STOP.

.2 P-10,11 IN AUTO MODE PUMP START/STOP SHALL BE CONTROLLED BY PROGRAMMABLE TIMER. (PROVIDE ONE TIMER IN EACH PUMP STARTER.)

.3 PROVIDE DUAL SET POINTS HIGH PRESSURE SWITCHES ON DISCHARGE SIDE OF PUMPS. FIRST SET POINT TO SEND HIGH PRESSURE ALARM TO RTU-3. SECOND SET POINT TO BE HARDWIRED TO STARTERS TO SHUTDOWN UMPS.

.4 PROVIDE ACCESSORIES AS PER GENERAL REQUIREMENTS LISTED ON DRAWING.

.5 STARTER AND CONTROL LOCATED IN MCC-2.

.6 PROVIDE 3-POSITION SELECTOR SWITCH FOR REMOTE START/STOP STATION CONTROL OF TRUCK LOADING PUMP. REMOTE START/STOP TO CONTROL SELECTED PUMP (POSITION OF SELECTOR SWITCH).

8.0 SUBMERSIBLE PUMPING STATION PUMPS (P-21, 22) CONTROL:

.1 PUMPS SHALL BE CONTROLLED BY LIT-902, IN AUTO MODE.

.2 REFER TO DRAWING FOR ELEVATION SET POINTS.

.3 STARTER AND CONTROL PANEL LOCATED IN CONTROL BUILDING.

.4 PROVIDE ACCESSORIES AS PER GENERAL REQUIREMENTS LISTED ON DRAWING.

.5 PUMPS SHALL ALTERNATE AUTOMATICALLY AFTER EVERY PUMPING CYCLE.
IN "REMOTE" MODE, PUMP SHALL BE CONTROLLED BY ON/OFF STATIONS LOCATED BEACON EGG.

.6 [illegible] LOW LEVEL SHUTDOWN SHALL BE ACTIVE

.7

IN ALL MODES, IE: REMOTE AND HAND.

9.0 LOW PRESSURE EFFLUENT WATER PUMPS (P-23, 24) CONTROL:

.1 MANUAL CONTROL OF PUMPS START/STOP.

.2 PUMPS SHALL SHUT DOWN UPON LOW LEVEL IN EFFLUENT WATER BASINS (LSL-901, LSL-902).

.3 PROVIDE ACCESSORIES AS PER GENERAL REQUIREMENTS LISTED ON DRAWING.

.4 STARTER AND CONTROL LOCATED IN MCC-1X.

10.0 HIGH PRESSURE EFFLUENT PUMPS (P-25, 26) CONTROL:

.1 CONTROLLED BY LOW PRESSURE SWITCH PSL-900 (START). HIGH PRESSURE SWITCH PSH-900 (STOP).

.2 PUMPS SHALL ALTERNATE AUTOMATICALLY AFTER EVERY PUMPING CYCLE.

.3 START SECOND PUMP IF DUTY PUMP FAILS.

.4 ONLY ONE PUMP TO RUN AT ANY TIME.

.5 LOW LEVEL FLOATS LSL-901 AND LSL-902 TO STOP PUMPS ON LOW LEVEL.

.6 HIGH LEVEL FLOATS TO SEND ALARM INDICATION TO CENTRAL MONITORING SYSTEM.

.7 STARTER TO INCLUDE INDICATION LIGHTS FOR RUN, STOP, OVERLOAD ALARM, HIGH LEVEL ALARM, LOW LEVEL ALARM, VOLTAGE ALARM.

.8 CONTROL PANEL LOCATED AT MCC-1X.

11.0 SUMP PUMP (P-29,30,31,PF-1) CONTROL:

.1 PUMP SHALL BE CONTROLLED BY TWO FLOAT SWITCHES, ONE FOR START AND SECOND FOR STOP.

.2 HIGH LEVEL ALARM FLOAT TO SEND ALARM TO CENTRAL MONITORING SYSTEM, AND ALARM LIGHT ON STARTER.

12.0 HEAT TRACING CONTROLS:

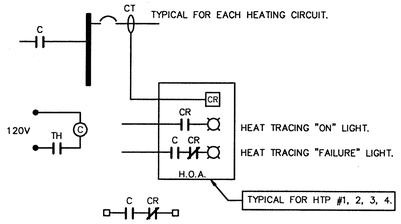

TO REMOTE MONITORING HEAT TRACING FAILURE.
ONE ALARM CONTACT FOR EACH HEAT TRACING PANEL.

CR - SINGLE PHASE AC CURRENT CONTROL RELAY.
- MEASURING RANGE: 0.5 - 500A AC WITH CURRENT TRANSFORMERS
- UPPER AND LOWER LIMITS SEPARATELY ADJUSTABLE
- DPDT OUTPUT RELAY, 5A CONTACTS
- LED INDICATIONS FOR POWER AND OUTPUT ON
- EQUAL TO: ELECTROMATIIC TYPE H479.

CT - CURRENT TRANSFORMER TO SUIT "CR". EQUAL TO: ELECTROMATIC.

TH - OUTSIDE TEMPERATURE THERMOSTAT CONTACTS TO ACTIVATE CONTACTOR. (THERMOSTAT SHALL BE LOCATED INDOOR WITH REMOTE SENSOR LOCATED OUTDOOR.) TYPICAL FOR TH-1,2,3.

C - HEAT TRACING CONTACTOR.

13.0 OUTSIDE LIGHTING CONTROL PANEL LCP-1

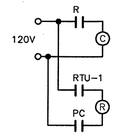

PC - PHOTO CELL

C - LIGHTING CONTACTOR

R - CONTROL RELAY

RTU-1 ON/OFF CONTROL FROM RTU-1.
THIS CONTACT SHALL BE CONTROLLED FROM TWO LOCATIONS:
.1 SWITCH ON RTU-1 PANEL.
.2 SWITCH ON PCM PANEL.

14.0 CENTRIFUGE (CONTROL PANEL BY DIV. 11)

.1 REFER TO DIVISION 11 SPECIFCATION.

.2 PROVIDE INTERLOCK WITH P-6,7. REFER TO 5.0 ABOVE.

.3 CENTRIFUGE TO SHUTDOWN UPON HIGH LEVEL IN THICKENED SLUDGE COLLECTION TANK (CONTACTS FROM LIT-400).

15.0 CONTROL PANEL VC-1

.1 PROVIDE TWO 120V, 1/2HP, 1Ø COMBINATION STARTERS FOR MOTORIZED VALVES.

.2 PROVIDE OPEN/CLOSE SWITCHES FOR EACH VALVE.

.3 PROVIDE VALVE POSITION INDICATION LIGHTS (OPEN AND CLOSED) FOR EACH VALVE.

.4 REFER TO ITEM 1.0 FOR GENERAL REQUIREMENTS.

.5 ENCLOSURE SHALL BE NEMA 4X STAINLESS STEEL.

.6 COORDINATE MOTOR SIZE WITH DIV. 11.

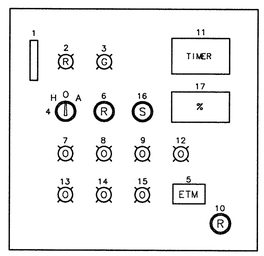

1. MAIN MCP BREAKER DISCONNECT
2. RUN LIGHT
3. STOP LIGHT
4. HAND, OFF, AUTO, OR HAND, OFF, REMOTE, OR HAND, OFF, AUTO, REMOTE.
5. ELAPSED TIME METER.
6. ALARM RESET BUTTON.
7. OVERLOAD ALARM LIGHT.
8. HIGH LEVEL ALARM LIGHT.
9. PUMP RUNNING WITHOUT WATER ALARM LIGHT.
10. OVERLOAD (MECHANICAL) RESET BUTTOM
11. PROGRAMMABLE TIMER
12. VFD FAILURE
13. ATS OVERTEMP ALARM
14. VOLTAGE ALARM
15. MOTOR OVERTEMP. ALARM
16. SPEED ADJUSTMENT BUTTON
17. % SPEED METER

NOTE:
REFER TO (1 / E-15) FOR DEVICES REQUIRED ON EACH STARTER.

(1 / E-15) GENERAL REQUIREMENTS FOR MOTOR STARTERS AND CONTROLS N.T.S.

(2 / E-15) TYPICAL STARTER COVER N.T.S.

03/10/1998

WB ID #F:\CAD\1993\93034\ELECT\104\ASBUILT\93034415

AS-BUILT

NOTE: REVISED "AS-BUILT" DRAWING. THIS DRAWING HAS BEEN REVISED TO INCORPORATE CHANGES AS INDICATED IN THE CONTRACTOR'S MARKED UP DRAWINGS. CHANGES DONE BY OWNER/OCWA WITHOUT THE CONSULTANT'S INVOLVEMENT ARE NOT INCLUDED ON THE DRAWINGS. CONTRACTOR'S DRAWINGS ARE NOT VERIFIED ON SITE BY ENGINEER. THE ENGINEER DOES NOT TAKE RESPONSIBILITY FOR INFORMATION ON THIS DRAWING THAT IS IN CONFLICT WITH THE EXISTING CONDITON DUE TO INACCURATE OR MISSING INFORMATION ON SOURCE DOCUMENTS PROVIDED.

Wood, Banani & Associates Limited
Consulting Engineers
(613)591-6050 FAX 591-9998
135 Michael Cowpland Drive, Suite 200, Kanata, Ontario, K2M 2E9

No.	Date	Revision
4	JAN. 98	AS-BUILT
3	OCT. 95	ISSUED FOR TENDER
2	SEPT. 15/95	ISSUED FOR REVIEW
1	JAN. 16/95	ISSUED FOR M.O.E.E. APPROVAL

McNEELY ENGINEERING CONSULTANTS LTD.

Owner: TOWNSHIP OF OSNABRUCK

Project: INGLESIDE SEWAGE TREATMENT PLANT
O.C.W.A. SEWAGE WORKS PROJECT No. 40-0797

Title: CONTROLS II

Design	G.M.	Scale	AS SHOWN	Proj. No. 93034-104	Dwg No.
Drawn	J.A.S.	Check	C.L.W.	Date SEPT. 15/95	E-16

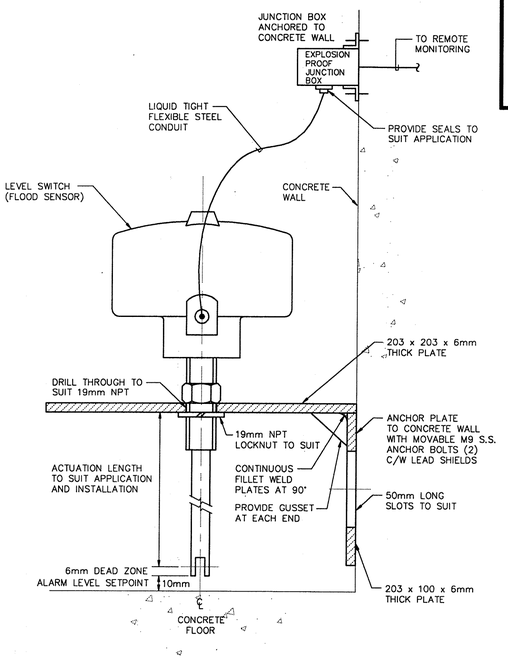

1 / E-16 FUEL LEAK SENSOR DETAIL
N.T.S.

NOTES:

1. PROVIDE GOOD STATION GROUNDING.
2. MOUNT FLOW TUBE IN DIRECT PROCESS LINE TO KEEP FLOW TUBE FULL.

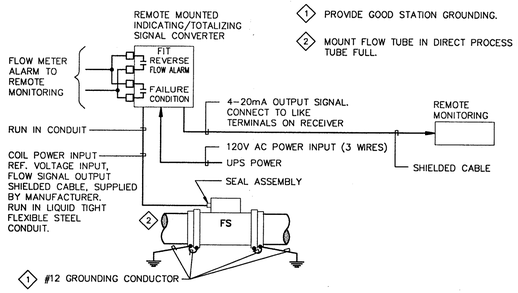

2 / E-16 MAGNETIC FLOWMETER
N.T.S.

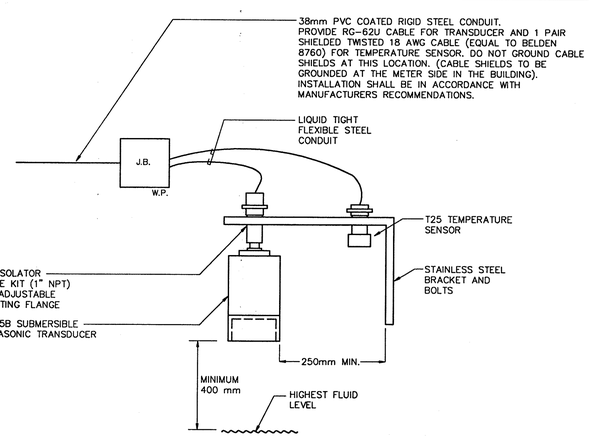

3 / E-16 ULTRASONIC LEVEL AND TEMPERATURE SENSORS
N.T.S.

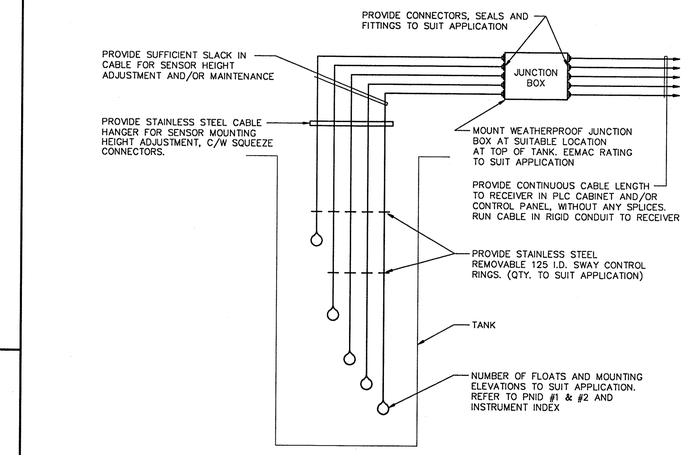

5 / E-16 TYPICAL FLOAT LEVEL SWITCHES
N.T.S.

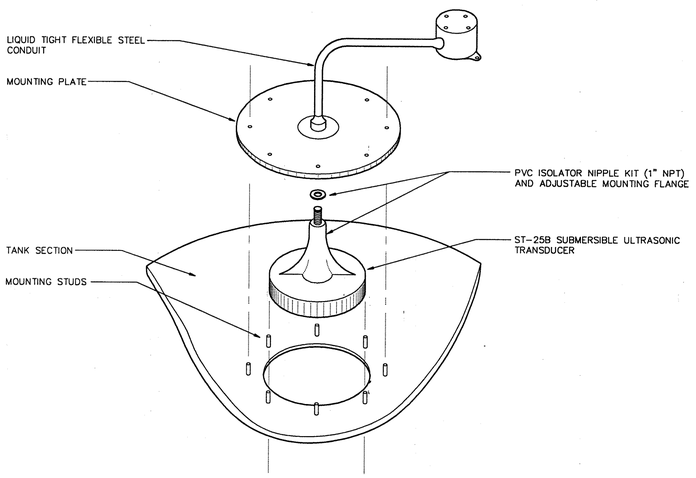

7 / E-16 ULTRASONIC LEVEL SENSOR
N.T.S.

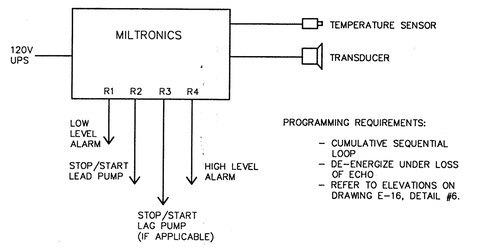

4 / E-16 PUMP CONTROL DIAGRAM
N.T.S.

NOTES:

CO-ORDINATE FINAL SET POINTS WITH DIV. 11.
CO-ORDINATE FINAL ELEVATIONS FOR INSTALLATION WITH DIV. 11 AND SITE CONDITIONS.

SUBMERSIBLE PUMPING STATION: (P-21,P-22) (LIT - 902)

72.340m	HIGH LEVEL ALARM
72.040m	START PUMP
71.740m	STOP PUMP
71.640m	LOW LEVEL ALARM, IF PUMP RUNNING.

GENERATOR DAY TANK:

LL : 10%	SHUTDOWN ENGINE
L : 25%	LOW LEVEL ALARM
H : 95%	HIGH LEVEL ALARM

(% OF VOLUME)

SCUM CHAMBER (P-8)(LIT-300):

HIGH LEVEL ALARM:	76.940 M
PUMP START:	76.000 M
PUMP STOP:	74.400 M
LOW LEVEL ALARM:	74.230 M (IF PUMP RUNNING)

THICKENED SLUDGE COLLECTION TANK (LIT-400)

:STOP P-9 :HIGH LEVEL ALARM
:START P-9 :LOW LEVEL ALARM :STOP CENTRIFUGE

6 / E-16 ELEVATION SET POINTS
N.T.S.

02/10/1998
MS ID #F:\CAD\1993\93034\ELECT\104\ASBUILT\93034A16

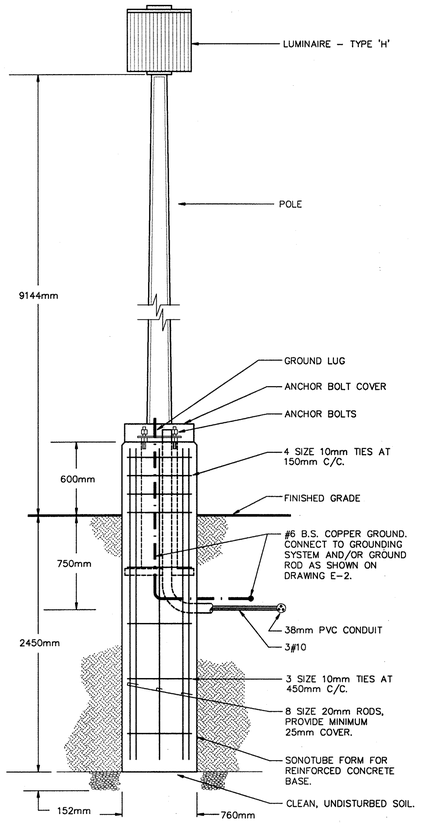

1 E-17 POLE DETAIL

SCALE 1:25

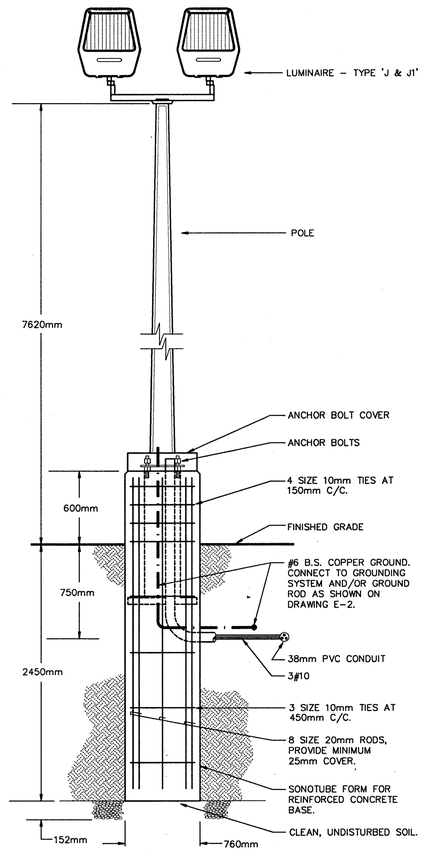

2 E-17 POLE DETAIL

SCALE 1:25

3 E-17 MOTOR CONNECTION DETAIL

SCALE 1:10

AS-BUILT

NOTE: REVISED "AS-BUILT" DRAWING. THIS DRAWING HAS BEEN REVISED TO INCORPORATE CHANGES AS INDICATED IN THE CONTRACTOR'S MARKED UP DRAWINGS. CHANGES DONE BY OWNER/OCWA WITHOUT THE CONSULTANT'S INVOLVEMENT ARE NOT INCLUDED ON THE DRAWINGS. CONTRACTOR'S DRAWINGS ARE NOT VERIFIED ON SITE BY ENGINEER. THE ENGINEER DOES NOT TAKE RESPONSIBILITY FOR INFORMATION ON THIS DRAWING THAT IS IN CONFLICT WITH THE EXISTING CONDITON DUE TO INACCURATE OR MISSING INFORMATION ON SOURCE DOCUMENTS PROVIDED.

07/10/2535

WB ID #: \CAD\1993\93034\ELECT\104\ASBUILT\93034417

Wood, Banani & Associates Limited
Consulting Engineers
(613)591-6050 FAX 591-9998
135 Michael Cowpland Drive, Suite 200, Kanata, Ontario, K2M 2E9

No.	Date	Revision
4	JAN. 98	AS-BUILT
3	OCT. 95	ISSUED FOR TENDER
2	SEPT. 15/95	ISSUED FOR REVIEW
1	JAN. 16/95	ISSUED FOR M.O.E.E. APPROVAL

McNEELY ENGINEERING CONSULTANTS LTD.

Owner: TOWNSHIP OF OSNABRUCK

Project: INGLESIDE SEWAGE TREATMENT PLANT
O.C.W.A. SEWAGE WORKS PROJECT No. 40-0797

Title: DETAILS

Design	R.D.	Scale	AS SHOWN	Proj. No. 93034-104	Dwg No. E-17
Drawn	J.A.S.	Check	C.L.W.	Date SEPT. 15/95	

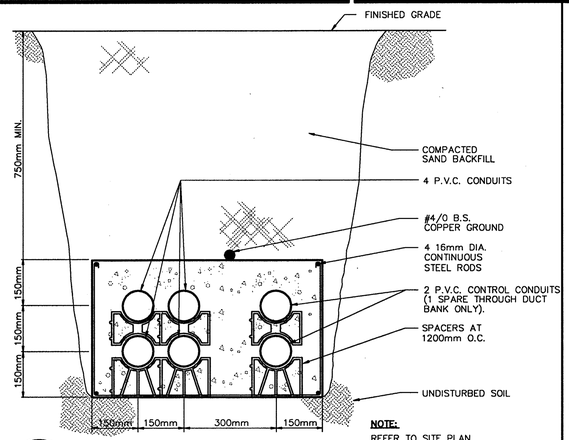

4 E-17 6 CELL DUCT BANK

SCALE 1:10

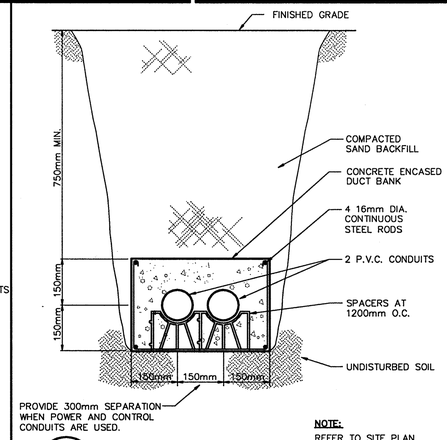

7 E-17 2 CELL DUCT BANK

SCALE 1:10

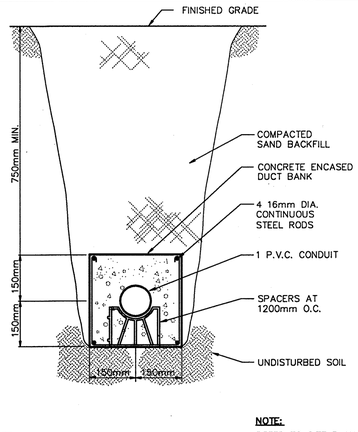

10 E-17 1 CELL DUCT BANK

SCALE 1:10

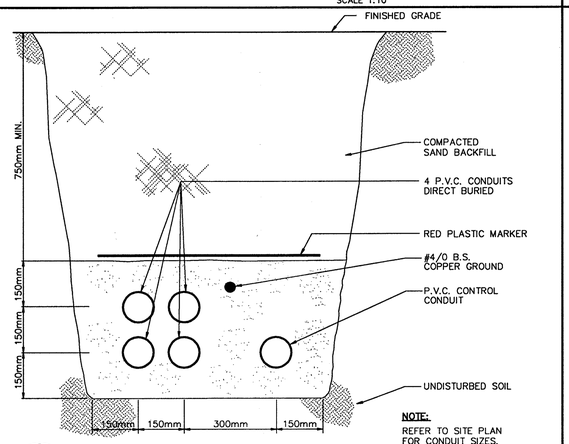

5 E-17 5 DUCTS – DIRECT BURIED

SCALE 1:10

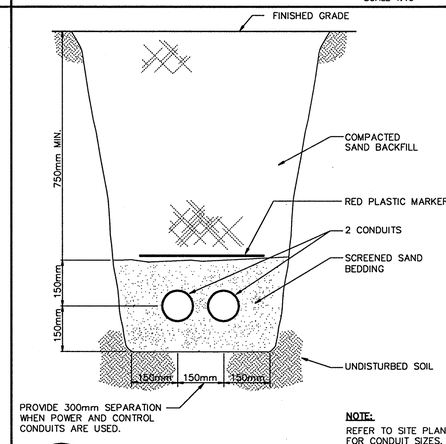

8 E-17 2 DUCTS – DIRECT BURIED

SCALE 1:10

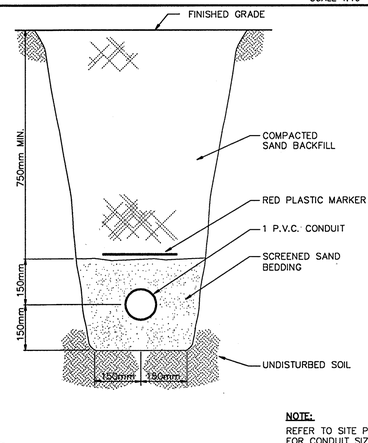

11 E-17 1 DUCT – DIRECT BURIED

SCALE 1:10

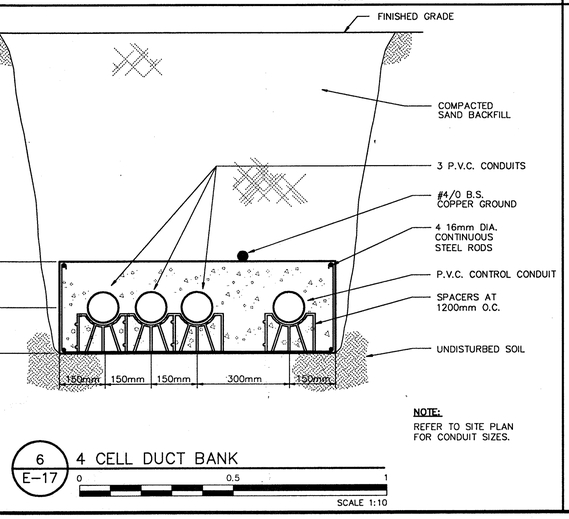

6 E-17 4 CELL DUCT BANK

SCALE 1:10

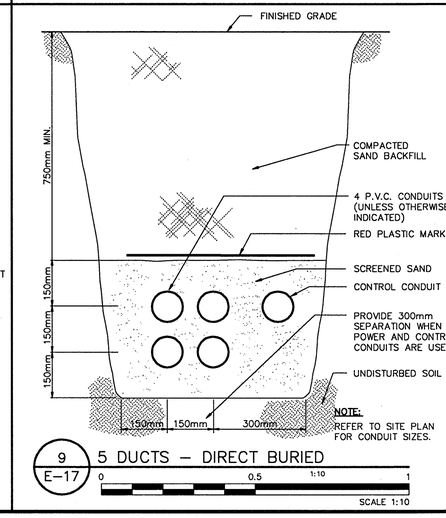

9 E-17 5 DUCTS – DIRECT BURIED

SCALE 1:10

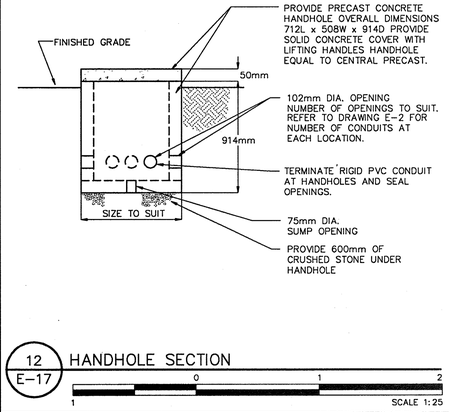

12 E-17 HANDHOLE SECTION

SCALE 1:25

AS BUILT

NOTE: REVISED "AS-BUILT" DRAWING. THIS DRAWING HAS BEEN REVISED TO INCORPORATE CHANGES AS INDICATED IN THE CONTRACTOR'S MARKED UP DRAWINGS. CHANGES DONE BY OWNER/OCWA WITHOUT THE CONSULTANT'S INVOLVEMENT ARE NOT INCLUDED ON THE DRAWINGS. CONTRACTOR'S DRAWINGS ARE NOT VERIFIED ON SITE BY ENGINEER. THE ENGINEER DOES NOT TAKE RESPONSIBILITY FOR INFORMATION ON THIS DRAWING THAT IS IN CONFLICT WITH THE EXISTING CONDITION DUE TO INACCURATE OR MISSING INFORMATION ON SOURCE DOCUMENTS PROVIDED.

N
NORTH FOR CONSTRUCTION PURPOSES

No.	Date	Revision
5	MARCH/98	AS BUILT
4	NOV/95	REVISED AS PER ADDENDUM No.3
3	OCT/95	ISSUED FOR TENDER
2	SEPT.15/95	ISSUED FOR REVIEW
1	JAN.16/95	ISSUED FOR M.O.E.E. APPROVAL

McNEELY ENGINEERING CONSULTANTS LTD.

Owner	TOWNSHIP OF OSNABRUCK
Project	INGLESIDE SEWAGE TREATMENT PLANT M.O.E.E. PROJECT No.40-0797
Title	CONTROL BUILDING FLOOR PLAN

Design	Scale 1:50	Proj. No. M2544-4	Dwg No. A-1
Drawn	Check F.J.P.	Date SEPT.15/95	

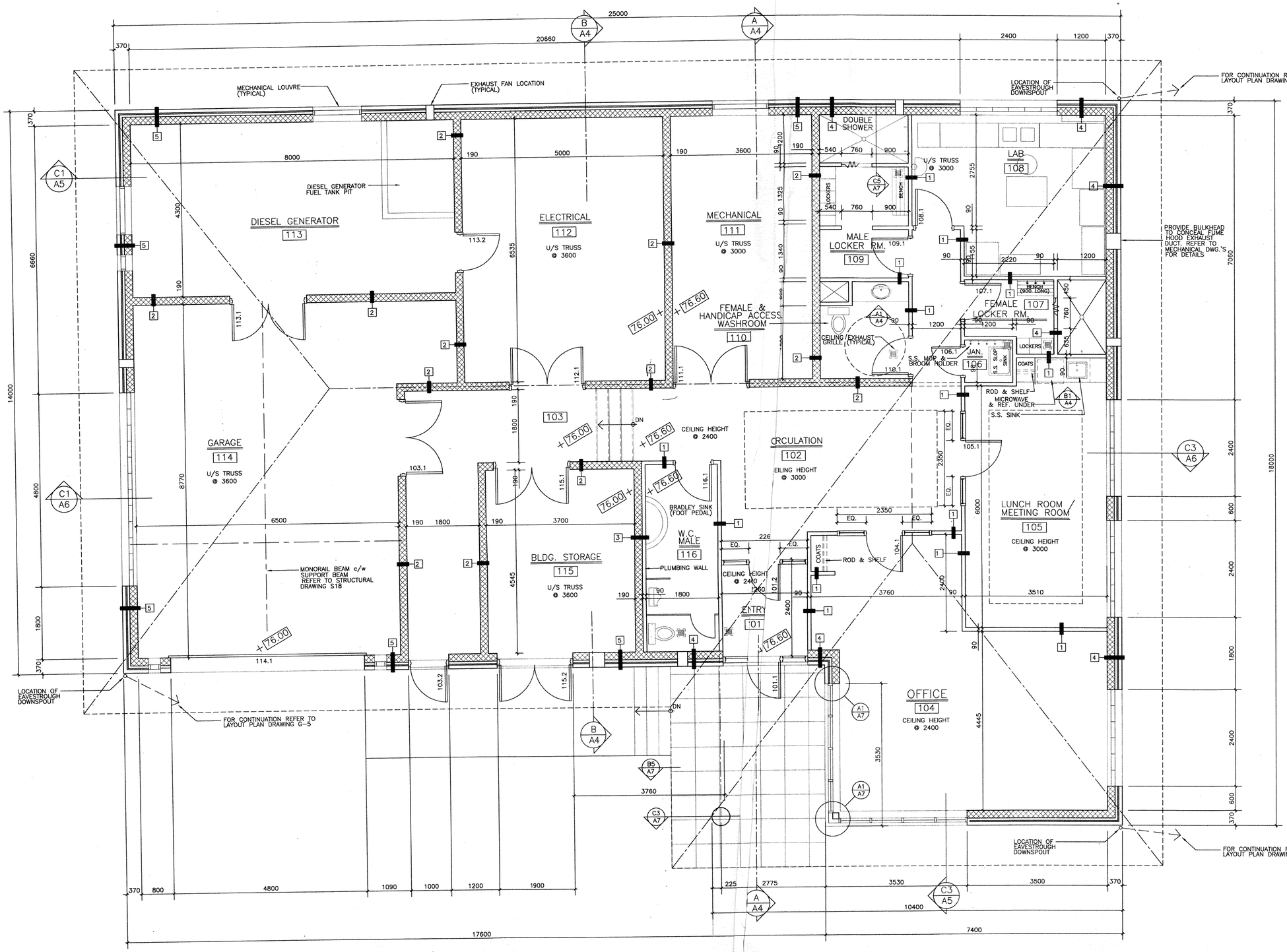

WALL TYPE LEGEND:

1. 13mm GYPSUM BOARD
   90mm METAL STUD 400mm O.C.
   13mm GYPSUM BOARD
2. 190mm CONCRETE BLOCK
3. 190mm CONCRETE BLOCK
   90mm METAL STUD 400mm O.C.
   13mm GYPSUM BOARD
4. 13mm GYPSUM BOARD
   25mm RIGID INSULATION
   50mm RIGID INSULATION
   190mm CONCRETE BLOCK
   50mm RIGID INSULATION
   25mm AIR SPACE
   90mm SILICATE BLOCK
5. 190mm CONCRETE BLOCK
   50mm RIGID INSULATION
   25mm AIR SPACE
   90mm SILICATE BLOCK

GENERAL NOTES:

1. FOR DETAILS OF LAB EQUIPMENT FURNITURE AND APPLIANCES REFER TO DIVISION 12 OF SPECIFICATION.
2. FOR REFELECTED CEILING PLAN REFER DRAWING E-9.
3. FOR CEILING FINISHES REFER TO FINISH SCHEDULE SECTION 0900 OF SPECIFICATION.
4. COORDINATE LOUVRE, FAN AND CHIMNEY LOCATIONS WITH MECHANICAL & ELEVATION DRAWINGS.
5. THE EAVESTROUGH AND DOWNSPOUT SHALL BE 100mmϕ.

2544A1

AS BUILT

NOTE: REVISED "AS-BUILT" DRAWING. THIS DRAWING HAS BEEN REVISED TO INCORPORATE CHANGES AS INDICATED IN THE CONTRACTOR'S MARKED UP DRAWINGS. CHANGES DONE BY OWNER/OCWA WITHOUT THE CONSULTANT'S INVOLVEMENT ARE NOT INCLUDED ON THE DRAWINGS. CONTRACTOR'S DRAWINGS ARE NOT VERIFIED ON SITE BY ENGINEER. THE ENGINEER DOES NOT TAKE RESPONSIBILITY FOR INFORMATION ON THIS DRAWING THAT IS IN CONFLICT WITH THE EXISTING CONDITION DUE TO INACCURATE OR MISSING INFORMATION ON SOURCE DOCUMENTS PROVIDED.

No.	Date	Revision
4	MARCH/98	AS BUILT
3	OCT/95	ISSUED FOR TENDER
2	SEPT.15/95	ISSUED FOR REVIEW
1	JAN.16/95	ISSUED FOR M.O.E.E. APPROVAL

McNEELY ENGINEERING CONSULTANTS LTD.

Owner	TOWNSHIP OF OSNABRUCK
Project	INGLESIDE SEWAGE TREATMENT PLANT M.O.E.E. PROJECT No.40-0797
Title	CONTROL BUILDING ELEVATIONS

Design	Scale 1:50	Proj. No. M2544-4	Dwg No. A-2
Drawn	Check F.J.P.	Date SEPT.15/95	

GENERAL NOTES:

1. COORDINATE LOUVRE & FAN LOCATIONS WITH MECHANICAL DRAWINGS.

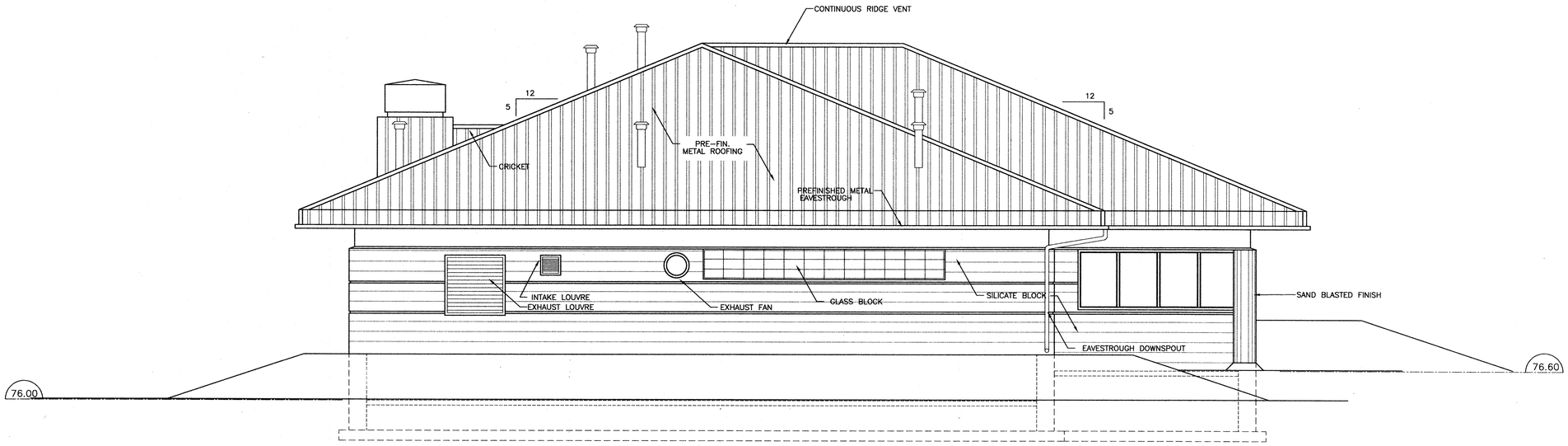

WEST ELEVATION

SCALE 1:50

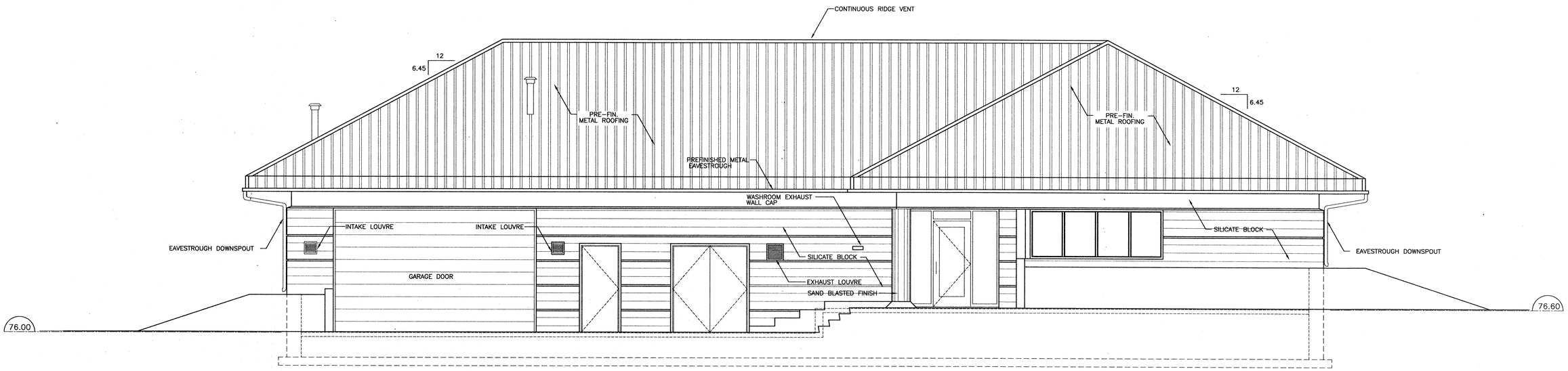

NORTH ELEVATION

SCALE 1:50

2544A2

AS BUILT

NOTE: REVISED "AS-BUILT" DRAWING. THIS DRAWING HAS BEEN REVISED TO INCORPORATE CHANGES AS INDICATED IN THE CONTRACTOR'S MARKED UP DRAWINGS. CHANGES DONE BY OWNER/OCWA WITHOUT THE CONSULTANT'S INVOLVEMENT ARE NOT INCLUDED ON THE DRAWINGS. CONTRACTOR'S DRAWINGS ARE NOT VERIFIED ON SITE BY ENGINEER. THE ENGINEER DOES NOT TAKE RESPONSIBILITY FOR INFORMATION ON THIS DRAWING THAT IS IN CONFLICT WITH THE EXISTING CONDITION DUE TO INACCURATE OR MISSING INFORMATION ON SOURCE DOCUMENTS PROVIDED.

No.	Date	Revision
4	MARCH/98	AS BUILT
3	OCT/95	ISSUED FOR TENDER
2	SEPT.15/95	ISSUED FOR REVIEW
1	JAN.16/95	ISSUED FOR M.O.E.E. APPROVAL

McNEELY ENGINEERING CONSULTANTS LTD.

Owner	TOWNSHIP OF OSNABRUCK
Project	INGLESIDE SEWAGE TREATMENT PLANT M.O.E.E. PROJECT No.40-0797
Title	CONTROL BUILDING ELEVATIONS

Design	Scale 1:50	Proj. No. M2544-4	Dwg No. A-3
Drawn	Check F.J.P.	Date SEPT.15/95	

GENERAL NOTES:

1. COORDINATE LOUVRE & FAN LOCATIONS WITH MECHANICAL DRAWINGS.

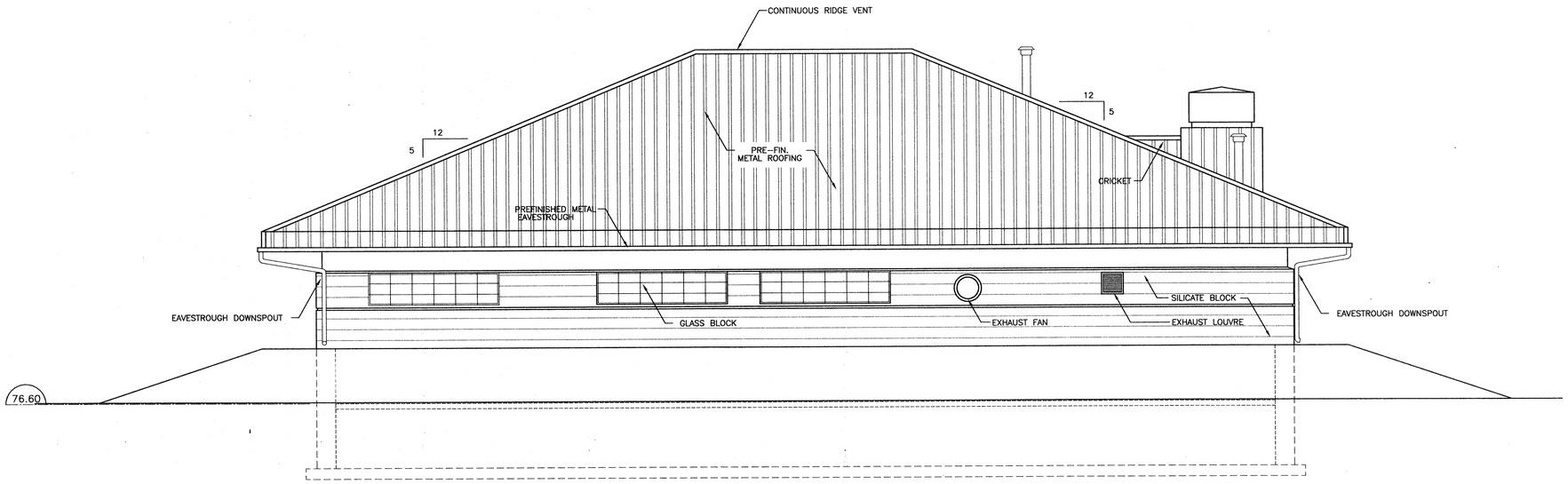

EAST ELEVATION
SCALE 1:50

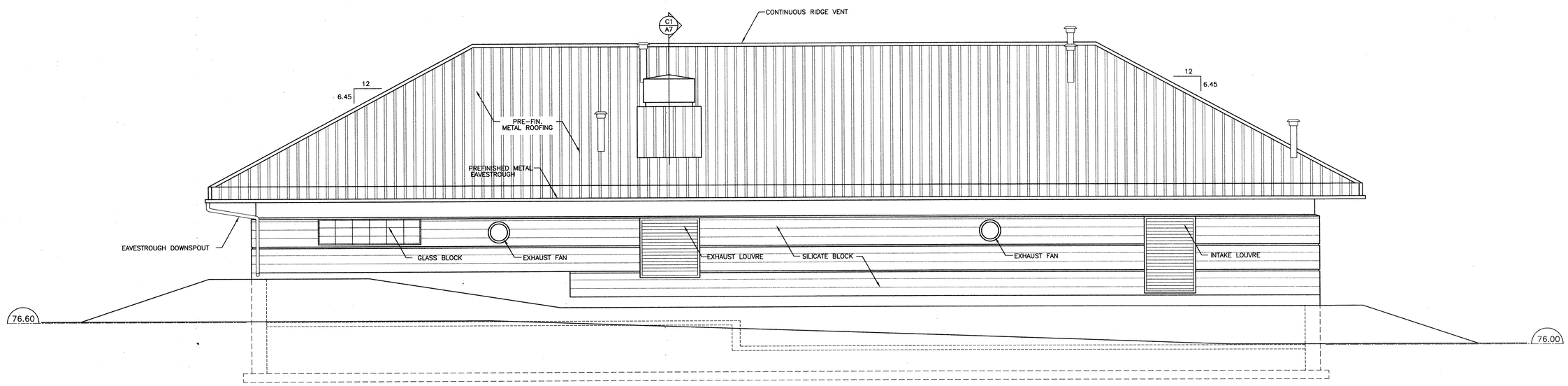

SOUTH ELEVATION
SCALE 1:50

2544A3

AS BUILT

NOTE: REVISED "AS-BUILT" DRAWING. THIS DRAWING HAS BEEN REVISED TO INCORPORATE CHANGES AS INDICATED IN THE CONTRACTOR'S MARKED UP DRAWINGS. CHANGES DONE BY OWNER/OCWA WITHOUT THE CONSULTANT'S INVOLVEMENT ARE NOT INCLUDED ON THE DRAWINGS. CONTRACTOR'S DRAWINGS ARE NOT VERIFIED ON SITE BY ENGINEER. THE ENGINEER DOES NOT TAKE RESPONSIBILITY FOR INFORMATION ON THIS DRAWING THAT IS IN CONFLICT WITH THE EXISTING CONDITION DUE TO INACCURATE OR MISSING INFORMATION ON SOURCE DOCUMENTS PROVIDED.

No	Date	Revision
4	MARCH/98	AS BUILT
3	OCT/95	ISSUED FOR TENDER
2	SEPT.15/95	ISSUED FOR REVIEW
1	JAN.16/95	ISSUED FOR M.O.E.E. APPROVAL

McNEELY ENGINEERING CONSULTANTS LTD.

Owner	TOWNSHIP OF OSNABRUCK
Project	INGLESIDE SEWAGE TREATMENT PLANT M.O.E.E. PROJECT No.40-0797
Title	CONTROL BUILDING BUILDING SECTIONS & MILLWORK ELEVATIONS

Design	Scale 1:50	Proj. No. M2544-4	Dwg No. A-4
Drawn	Check F.J.P.	Date SEPT.15/95	

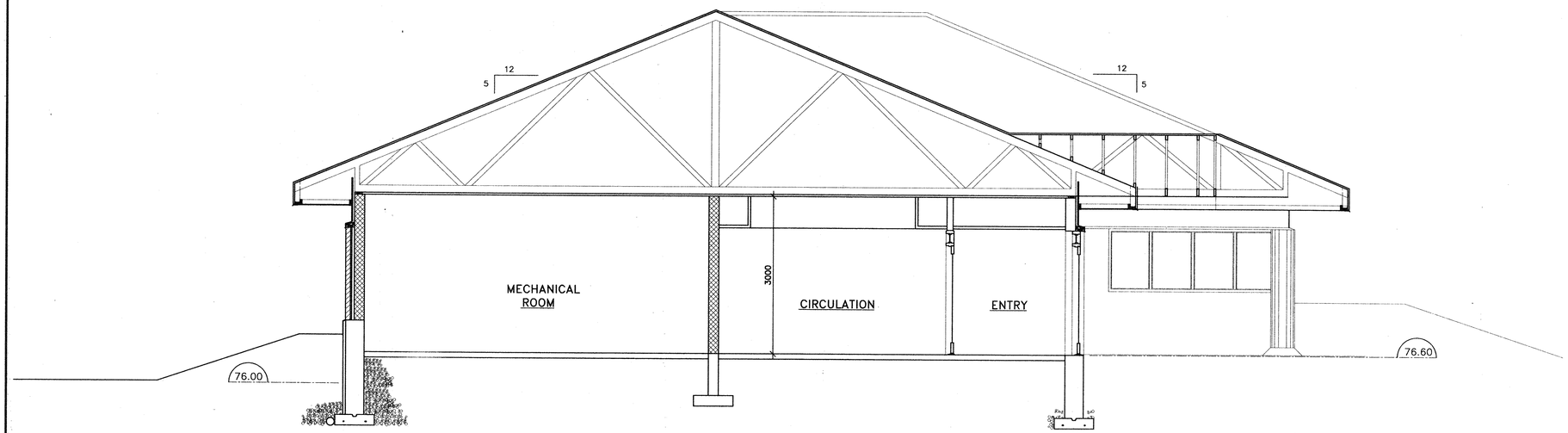

A/A1 BUILDING SECTION
SCALE 1:50

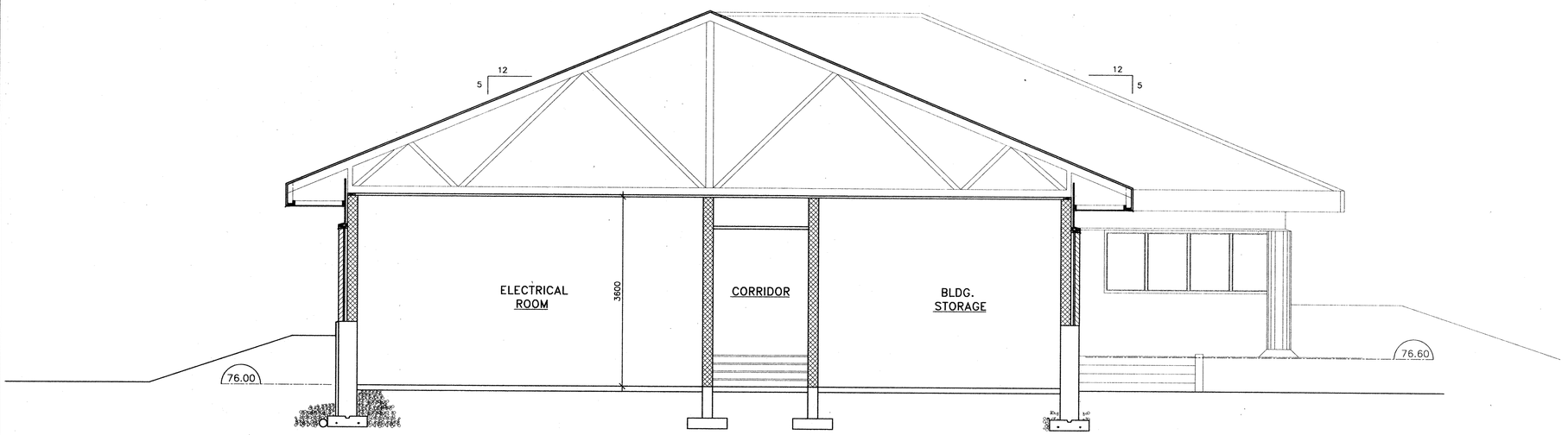

B/A1 BUILDING SECTION
SCALE 1:50

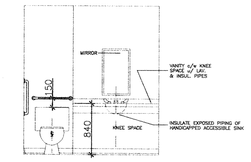

A1/A1 BATHROOM ELEVATION
1:50

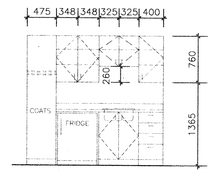

B1/A1 KITCHEN ELEVATION
1:50

2544A4

AS BUILT

NOTE: REVISED "AS-BUILT" DRAWING. THIS DRAWING HAS BEEN REVISED TO INCORPORATE CHANGES AS INDICATED IN THE CONTRACTOR'S MARKED UP DRAWINGS. CHANGES DONE BY OWNER/OCWA WITHOUT THE CONSULTANT'S INVOLVEMENT ARE NOT INCLUDED ON THE DRAWINGS. CONTRACTOR'S DRAWINGS ARE NOT VERIFIED ON SITE BY ENGINEER. THE ENGINEER DOES NOT TAKE RESPONSIBILITY FOR INFORMATION ON THIS DRAWING THAT IS IN CONFLICT WITH THE EXISTING CONDITION DUE TO INACCURATE OR MISSING INFORMATION ON SOURCE DOCUMENTS PROVIDED.

No.	Date	Revision
5	MARCH/98	AS BUILT
4	DEC/95	REVISED AS PER ADDENDUM No.4
3	OCT/95	ISSUED FOR TENDER
2	SEPT.15/95	ISSUED FOR REVIEW
1	JAN.16/95	ISSUED FOR M.O.E.E. APPROVAL

McNEELY ENGINEERING CONSULTANTS LTD.

Owner	TOWNSHIP OF OSNABRUCK
Project	INGLESIDE SEWAGE TREATMENT PLANT M.O.E.E. PROJECT No.40-0797
Title	CONTROL BUILDING WALL SECTIONS

Design	Scale 1:50	Proj. No. M2544-4	Dwg No.	A-5
Drawn	Check F.J.P.	Date SEPT.15/95		

TYPICAL ROOF CONSTRUCTION
PRE FINISHED METAL ROOF WITH RAISED SEAM
13mm PLYWOOD C/W H CLIPS
PRE-ENGINEERED ROOF TRUSSES
R40 BATT INSULATION
19mm X 64mm WOOD FURRING
6 MIL POLY VAPOUR BARRIER
16mm TYPE "X" GYPSUM BOARD

MITRED JOINT c/w CONCEALED FLASHING

TYPICAL 75mm WIDE CONTINUOUS PRE FINISHED SOFFIT VENT COLOUR TO MATCH SOFFIT

FASCIA CONSTRUCTION
PRE FINISHED METAL FASCIA WITH RAISED SEAM TO ALIGN WITH ROOF ON 38x89 WOOD BACKUP

400

PRE FINISHED METAL DRIP EDGE AND FLASHING TO MATCH ROOF

1000

400

SOFFIT CONSTRUCTION
PRE FINISHED METAL PANEL ON 38x89 WOOD BACKUP

PRE FINISHED METAL FLASHING BAND TO BE BONDED WITH ADHESIVE TO 16mm PLYWOOD ATTACHED TO 50mm WOOD BLOCKING. BEND FLASHING AROUND EXPOSED BOTTOM EDGE

50mm RIGID INSULATION

PRE FINISHED METAL SILL FLASHING c/w DRIP EDGE - RUN FLASHING BEHIND FLASHING BAND AND BOND WITH ADHESIVE TO 16mm PLYWOOD PROVIDE SLIP JOINT AT ALL CONNECTIONS

WALL CONSTRUCTION
90mm SILICATE BLOCK
25mm AIR SPACE
50mm RIGID INSULATION
190mm CONCRETE BLOCK

LINE OF DROPPED CEILING WHERE APPLICABLE

600

1200 / 1800

3000 / 3600 N.T.S.

FOUNDATION CONSTRUCTION
PRE FINISHED METAL FLASHING
6mm CEMENTITOUS PROTECTOR BOARD
300mm BELOW FINISHED GRADE MIN.
50mm RIGID INSULATION
DAMPROOFING
350mm POURED CONCRETE REINFORCED FOUNDATION WALL

150

CONCRETE SLAB CONST.
100mm CONCRETE SLAB
150mm COMPACTED GRANULAR "A" BASE

1200 N.T.S.

100

500

350

76.60 UPPER FLOOR CONDITION

76.00 LOWER FLOOR CONDITION

150mm WEEPING TILE

C1/A1 TYPICAL WALL SECTION
SCALE 1:10

TYPICAL 75mm WIDE CONTINUOUS PRE FINISHED SOFFIT VENT COLOUR TO MATCH SOFFIT

MECH.

600

T-BAR CEILING @ 2400mm HEIGHT MIN.

CONC. BLOCK BOND BEAM OVER GLASS BLOCK OPENING

38mm WOOD BLOCKING AS REQUIRED
FILL VOIDS WITH BATT INSULATION
STEEL BEAM - REFER TO STRUCTURAL DRAWING No. S18

1200

3000 N.T.S.

38mmX184mm TOP & BOTTOM OF WINDOW OPENING

13mm PLYWOOD SILL C/W BULLNOSE EDGE

38mmX89mm WOOD BLOCKING

CAULKING

150

1200 N.T.S.

76.60

100

500

350

150mm WEEPING TILE

C3/A1 WALL SECTION @ OFFICE
SCALE 1:10

254445

AS BUILT

NOTE: REVISED "AS-BUILT" DRAWING. THIS DRAWING HAS BEEN REVISED TO INCORPORATE CHANGES AS INDICATED IN THE CONTRACTOR'S MARKED UP DRAWINGS. CHANGES DONE BY OWNER/OCWA WITHOUT THE CONSULTANT'S INVOLVEMENT ARE NOT INCLUDED ON THE DRAWINGS. CONTRACTOR'S DRAWINGS ARE NOT VERIFIED ON SITE BY ENGINEER. THE ENGINEER DOES NOT TAKE RESPONSIBILITY FOR INFORMATION ON THIS DRAWING THAT IS IN CONFLICT WITH THE EXISTING CONDITION DUE TO INACCURATE OR MISSING INFORMATION ON SOURCE DOCUMENTS PROVIDED.

No.	Date	Revision
4	MARCH/98	AS BUILT
3	OCT/95	ISSUED FOR TENDER
2	SEPT.15/95	ISSUED FOR REVIEW
1	JAN.16/95	

McNEELY ENGINEERING CONSULTANTS LTD.

Owner	TOWNSHIP OF OSNABRUCK
Project	INGLESIDE SEWAGE TREATMENT PLANT M.O.E.E. PROJECT No.40-0797
Title	CONTROL BUILDING WALL SECTIONS

Design	Scale 1:50	Proj. No. M2544-4	Dwg No. A-6
Drawn	Check F.J.P.	Date SEPT.15/95	

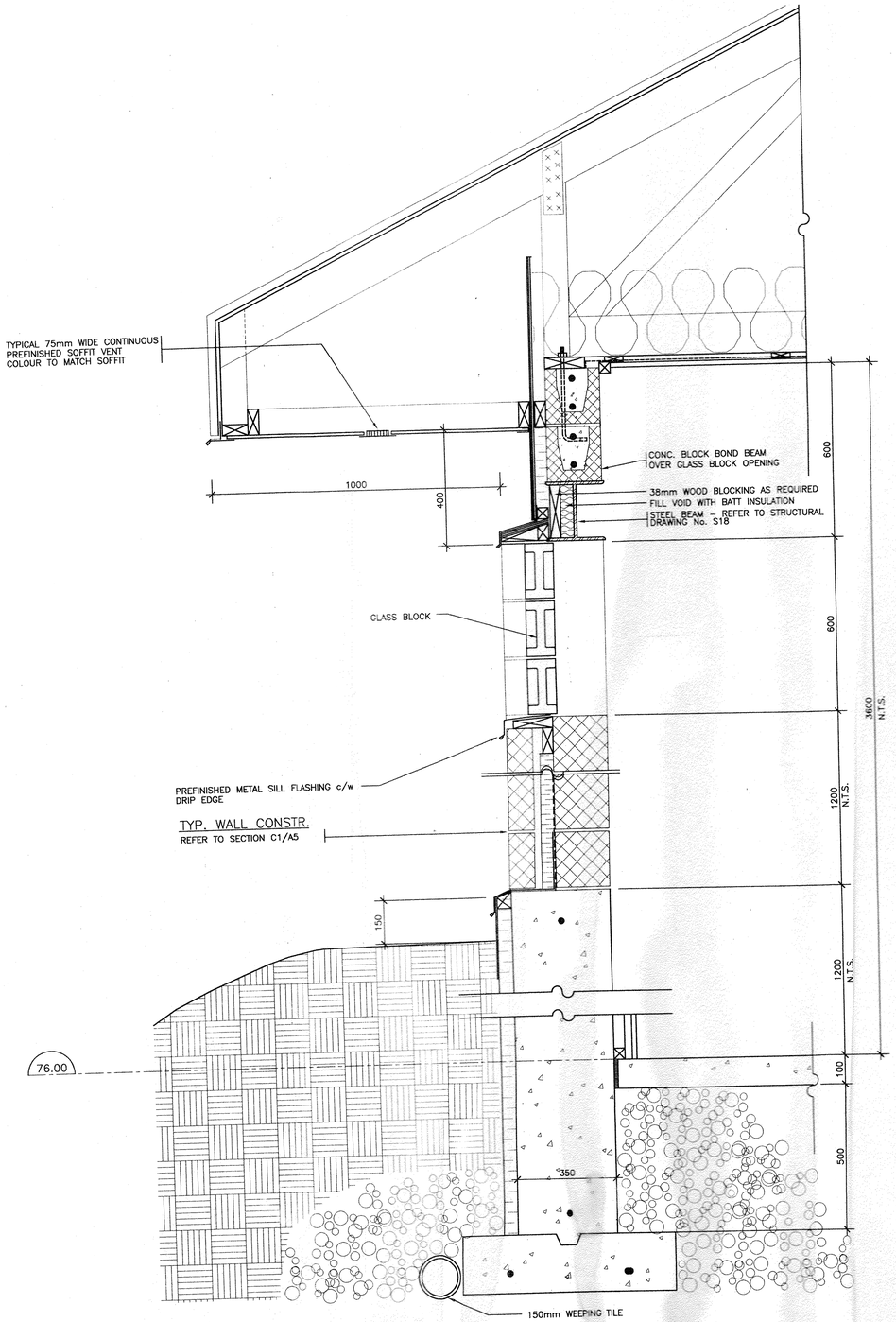

C1/A1 WALL SECTION @ GARAGE

SCALE 1:10

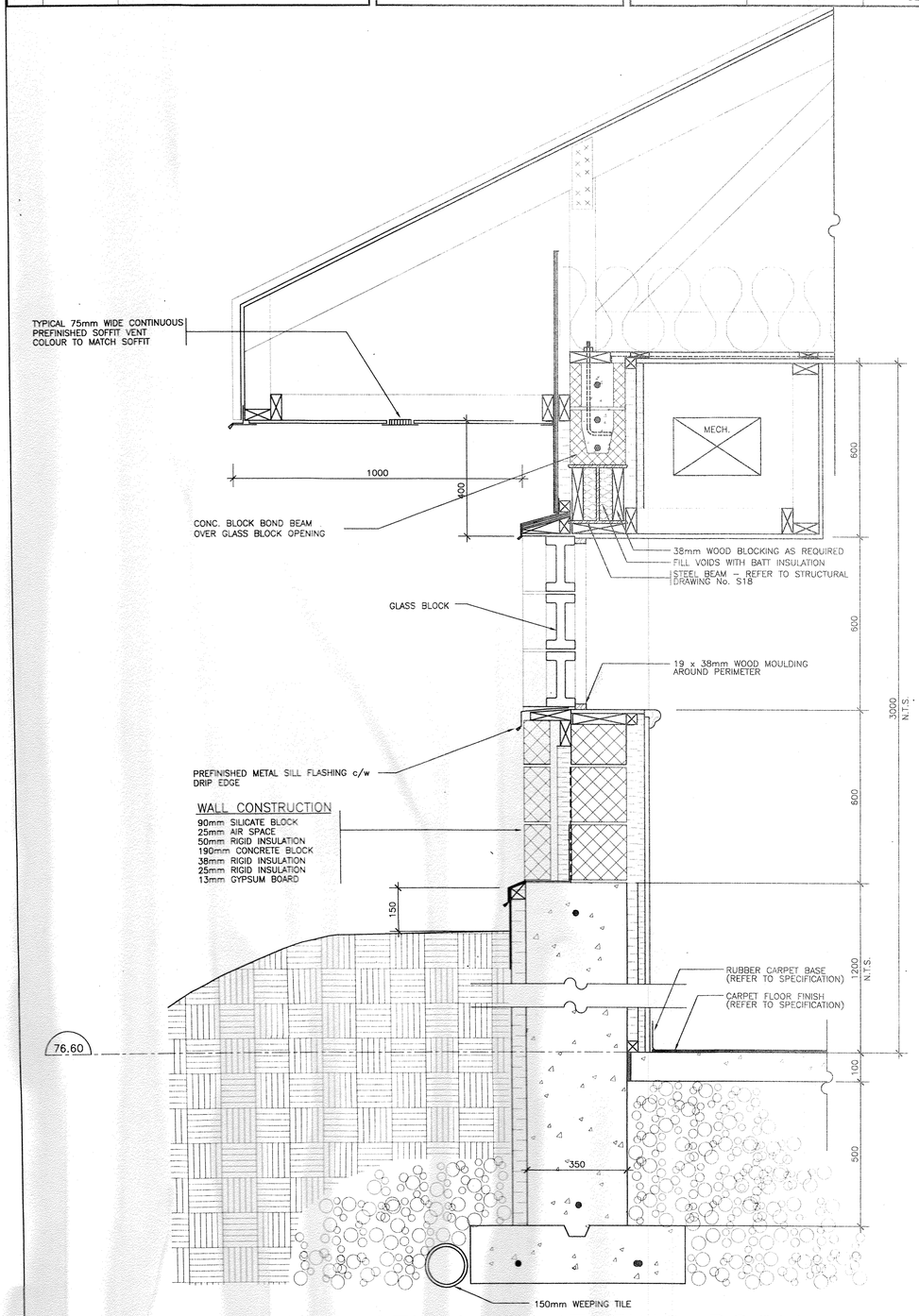

C3/A1 WALL SECTION @ MEETING ROOM

SCALE 1:10

2544A6